From the Editor's Desk

In the midst of pandemic Covid-19, engineers in the Power Sector are giving their best to provide uninterrupted and quality power to the consumers by following all guidelines w.r.t. Covid-19.

International Association on Electricity Generation, Transmission and Distribution - Afro Asian Region (AARO) is an international forum of experts & organizations engaged in the various technical activities related to the field of Power development at Afro Asian Region. The association was formed in the year 1990. This Association has been created for the benefit of all the developing countries in the Afro – Asian region, with their mutual help and cooperation.

India is prone to large number of natural calamities as well as man-made disasters. The geology of the mountains is such that it may lead to landslides avalanches causing damage to the tower foundations resulting in disruption of power supply. Out of about 7500 km long coastal line, around 5700 km is prone to cyclones and tsunamis. Around 58% lands mass of the country is vulnerable in varying degrees to earthquake of moderate to high intensity. Frequent earthquakes & cyclones in the recent past are also of great concern.

Electricity is the lifeline of the economy as well as of the society. Any disruption in the supply of electricity causes not only loss to the economy, but also creates hardship to human beings, as every aspect of human life is connected with electricity. As such, any situation in the power sector has great impact and needs special attention.

Power sector being one of the important infrastructures may get affected due to any disaster leading to disruption in generation, transmission and distribution of electricity. Accidents also happen in the field due to damage of equipment attributed to deficiencies like faulty design, Poor quality equipment, Manufacturing process, Transportation, Erection and Commissioning, negligence, over confidence, lack of maintenance and Supervision, ignoring the safety instructions, lack of training to staff etc.

Though Electric and fire safety, Disaster Management are the key areas where more attention is required to be given but unfortunately these areas are generally ignored and given casual attention. CBIP, while appreciating the concern, has included these important areas in the ambit & scope of it's training activities and already conducted many training programs in organizations like NHPC, KPTCL etc. on the subject of Electrical and fire safety.

It is in this context the CBIP, CIGRE-India in association with International Association on Electricity Generation, Transmission and Distribution (Afro-Asian Region) has organised Conference on 'National Conference on Disaster Management for Transmission and Distribution Systems (including Prevention of Accidents)' on 13-14 February 2020.

The main aim of the conference was to share the experience and sensitize the utilities for dealing with crisis situations and steps/measures which could be adopted for such emergency conditions. A few case studies on various types of emergency situation in power sector giving details of action taken during and post crisis period and strategy adopted to avoid reoccurrence of such incidents deliberated in the conference. This issue of the journal covers this report of Conference.

This issue contains 7 articles, written by eminent engineers, which are very interesting.

We would like to complement the authors of various papers who have come forward to contribute articles for this issue of journal. Through this journal, it has been our endeavor to share the experiences of Power Engineers in field of Generation, Transmission & Distribution. We, therefore, request the readers to send their contributions in the shape of technical papers etc. for publications in this journal. We hope that the article and information included in this issue of journal will be of interest to the readers and they will be benefitted.

Dr. G.P. Patel
Secretary General, AARO & Secretary, CBIP

Disaster Management of Power System- Holistic View

M.L. Sachdeva
Former Chief Engineer, C.E.A

N.S. Sodha
Former Executive Director, Power Grid

ABSTRACT

Countries around the globe have been experiencing increased in frequency, intensity and impact of disasters both Natural mostly attributed to changing environment (Forest fire, Hurricanes, Storms, Landslides, Earthquakes, tsunamis) and manmade events (cyberattack, act of terrorism on public centers, power & communication facilities and industrial centers and its societal impact. Center and States to implement Guidelines issued by National Disaster Management Authority (NDMA) & other authorized entities thru 24x7x365 fully staffed & fully equipped Disaster management centers and carry out mock drills and periodical training. Digitized Mapping with GPS& Apps of disaster-prone areas and facilities along with special communication devices (Satellite Phone ,Two-Way Radio, Citizens Band Radio, Amateur Radio/HAM Radio) shall be readily made available to help information and recovery

Digitization of health services, banking & trading facilities, industries, communication centers & induction of e-Mobility need uninterrupted around the clock power supply.

Though all the facilities including Electricity and Communication are planned, designed and operated as per National / International standards and country practices but electricity and communication installations have to face the brunt of increased number and magnitude of natural calamities and as such design and operation inputs due to climatic changes need revalidation. The maps of wind, temperature, rainfall, seismic, etc. need to modified and updated on the basis of measurements made during the events and equipment / installation to be standardized / hardened to cater for disasters. The operation and maintenance practices / procedures having far bearing damaging effect on country economy and resources also need revalidation as per disaster prone areas

To strengthen communication system as a part of disaster management, PowerGrid under 'Disaster Management' Role have modified its OPGW network on Transmission lines to provide connectivity to the talukas & Panchayats falling within its corridors of transmission network, Sharing its rugged and sturdy transmission tower infrastructure for installing GSM radio antennas to provide connectivity to district HQ/ Talukas & Panchayats falling with in the corridor of 50 Kms of its transmission network, Emergency Restoration System (ERS) in case of tower failures as also restoring communication network on OPGW.

***Key words** : Disasters natural & man-made, Identification of Danger Zones, NDMA guidelines, Digitized maps, Revalidations of Maps & Equipment standard, hardening of existing facilities, Mock drills*

1. INTRODUCTION

1.1 Disasters as per World Development Report (IFRCRC,2001) (Ref.1)

The Main Features of Disaster are shown in Fig.1

Natural Disasters, as per World Development Report (IFRCRC,2001) is categorized into hydro meteorological (earthquakes, volcanic eruptions, etc.) and geophysical (landslides, droughts, etc.) The scope of unnatural disasters broadly encompasses conflict, civil strife, riots and industrial disasters. Disaster management is essentially a dynamic process. It comprises the classical management functions of planning, organizing, staffing, leading and controlling. It also involves many organizations, which must work together to prevent, mitigate, prepare for, respond to and recover from the effects of disaster.

Fig.1

Disaster management would therefore include immediate response, recovery, prevention, mitigation, preparedness and the cycle goes on. Natural Disasters are huge economic burdens on developing nations. Every year, huge amount of resources are mobilized for rescue, relief and rehabilitation works following natural disaster occurrences. Development and disaster-related policies have largely focused on emergency response, leaving a serious under-investment in natural hazard prevention and mitigation.

The subject of disaster management is not mentioned in any of the three lists in the Seventh Schedule of the Indian constitution, whereas the same were covered under the Central and State governments. In the post-independent India, Five year plans pointed on the understanding of disasters to mitigate droughts and floods; schemes such as the Drought Prone Area Program (DPAP), Desert Development Program (DDP), National Watershed Development Project for Rain fed Areas (NWDPRA) and Integrated Water Development Project (IWDP) are examples of this conventional paradigm (Planning Commission, 2002).

1.2 Disaster Management in India adopted in 2011 (Ref.2)

The Government of India enacted the Disaster Management Act in 2005 and adopted a National Policy on Disaster Management in 2009. As per Disaster Management in India, 2011, the Disaster is defined as under:

(i) Disasters, in views of modern and social understanding & in terms of a more modern and social understanding, are recognized as artificial since most of them result from the action/ inaction of people and their social and economic structures. This happens by people living in ways that degrade their environment, developing and over populating urban centers, or creating and perpetuating social and economic systems. Communities and population are settled in areas susceptible to the impact of a raging river or the high vulnerability of violent tremors of the earth because of their socio-economic conditions. This is compounded by every aspect of nature being subject to seasonal, annual and sudden fluctuations and also due to the unpredictability of the timing, frequency and magnitude of occurrence of the disasters.

(ii) Disaster is an event/series of events, which gives rise to casualties and damage / loss of properties, infrastructures, environment, essential services or means of livelihood on such a scale which is beyond the normal capacity of the affected community to cope with. Disaster is also sometimes described as a "catastrophic situation in which the normal pattern of life or eco-system has been disrupted and extra-ordinary emergency interventions are required to save and preserve lives and or the environment".

1.3 'National Disaster Management Plan (NDMP)'- May, 2016 by National Disaster Management Authority (NDMA), New Delhi (Ref.3)

The NDMP-May 2016 is consistent with the approaches promoted globally by the United Nations to which India is a signatory, in particular the Sendai Framework for Disaster Risk Reduction 2015-2030 (hereafter "Sendai Framework") adopted at the Third UN World Conference in Sendai, Japan, on 18th March, 2015. The Plan takes into account the Global Trends in disaster management.

The milestones mentioned in comprehensive Disaster Management Act 2005 and adopted National Policy on Disaster Management in 2009 signaled a paradigm shift from relief centric approach to a comprehensive, proactive approach focused on disaster risk reduction encompassing all aspects of disaster management spectrum.

The NDMP include compliance / follow up of three land mark international Agreements viz a) Sendai Frame work for Disaster Risk Reduction in March 2015, b) Sustainable Development Goals 2015-30 in Sept 2015 and c) Paris Agreement on Climate change at 21st Conference of Parties under the UN Framework Convention on Climate Change in Dec 2015.

Measures some to be completed concurrently, The NDMP is highly ambitious and envisions short (5years), medium (10years) and long term (15years) rather than sequentially. The NDMP dynamic by its very nature having to periodically factor-in new elements, it also has components that can be completed only in phased manner at different scales in diverse geographies.

The NDMP -May 2016 document includes the following documents placed at Annex: A:

(i) List of NDMA's Disaster Management Guidelines (Annex: A 1)

(ii) Earthquake Vulnerability Zones of India (Annex: A 3)

(iii) Flood Vulnerability Zones of India (Annex: A 4)

(iv) Wind and Cyclone Vulnerability Zones of India (Annex: A 5)

(v) Central Agencies designated for Natural Hazard– Early Specific Warnings (Annex: A 2)

(Ref: TRAI India Experiences in Developing Disaster Communications Plans TELECOM REGULATORY AUTHORITY OF INDIA and Early Warning Systems)

Annexure-I: List of NDMA's Disaster Management Guidelines

	Theme	Title of NDMA Guideline	Year
1	Biological Disaster	National Disaster Management Guidelines – Management of Biological Disasters	2008
2	Chemical (Industrial)	National Disaster Management Guidelines – Chemical Disasters	2007
3	Chemical (Terrorism)	National Disaster Management Guidelines – Management of Chemical (Terrorism) Disasters	2009
4	Cyclones	National Disaster Management Guidelines – Management of Cyclones	2008
5	DM Plans for States	National Disaster Management Guidelines – Preparation of State Disaster Management Plans	2007
6	Drought	National Disaster Management Guidelines – Management of Drought	2010
7	Earthquakes	National Disaster Management Guidelines – Management of Earthquakes	2007
8	Fire Services - Scaling, Type of Equipment and Training	National Disaster Management Guidelines – Scaling, Type of Equipment and Training of Fire Services	2012
9	Flood	National Disaster Management Guidelines – Management of Floods	2008
10	Heat Wave	Guidelines for Preparation of Action Plan – Prevention and Management of Heat-Wave	2016
11	Hospital Safety	National Disaster Management Guidelines – Hospital Safety	2016
12	Incident Response System	National Disaster Management Guidelines – Incident Response System	2010
13	Information and Communication System	National Disaster Management Guidelines – National Disaster Management Information and Communication System	2012
14	Landslide and Snow Avalanches	National Disaster Management Guidelines – Management of Landslide and Snow Avalanches	2009
15	Medical Preparedness and Mass Casualty Management	National Disaster Management Guidelines – Medical Preparedness and Mass Casualty Management	2007
16	Minimum Standards for Relief	Guidelines on Minimum Standards of Relief	2016
17	Nuclear and Radiological Emergencies	National Disaster Management Guidelines – Nuclear and Radiological Emergencies	2009
18	Psycho-Social Support	National Disaster Management Guidelines – Psycho-Social Support and Mental Health Services in Disasters	2009
19	School Safety Policy	National Disaster Management Guidelines – School Safety Policy	2016
20	Seismic Retrofitting of Deficient Buildings and Structures	National Disaster Management Guidelines – Seismic Retrofitting of Deficient Buildings and Structures	2014
21	Tsunamis	National Disaster Management Guidelines – Management of Tsunamis	2010
22	Urban Flooding	National Disaster Management Guidelines – Management of Urban Flooding	2010

Source: http://ndma.gov.in/en/ndma-guidelines.html (as on 30 April 2016)

Annex 2 : Table: Central Agencies designated for Natural Hazard–Early Specific Warnings

Sr No	Hazard	Ministry Designated
1	Avalanches	Snow and avalanche Study Establishment(SASE)
2	Cyclone	Indian Meteorological Department(IMD)
3	Drought	Ministry of Agriculture and farmers welfare(MoAFW)
4	Earthquake	Indian Meteorological Department(IMD)
5	Epidemics	Ministry of Health & Family welfare
6	Floods	Central Water Commission(CWC)
7	Landslides	Gelogical Survey of India(GSI)
8	Tsunami	Indian National Centre for Oceanic Information Services(INCOIS)

Annex 3 : Earthquake Vulnerability Zones of India

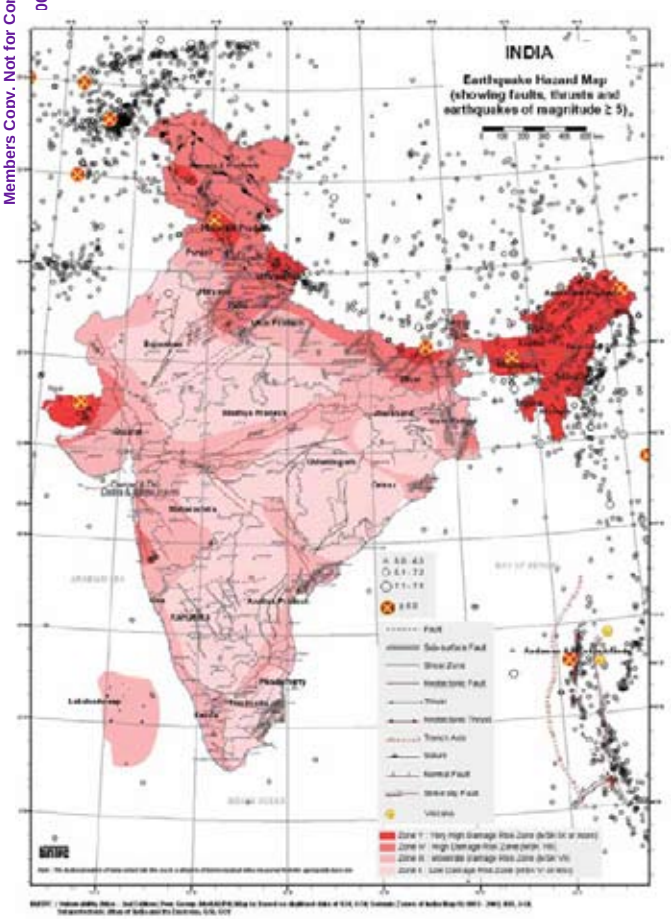

Annex 4 : Flood Vulnerability Zones of India

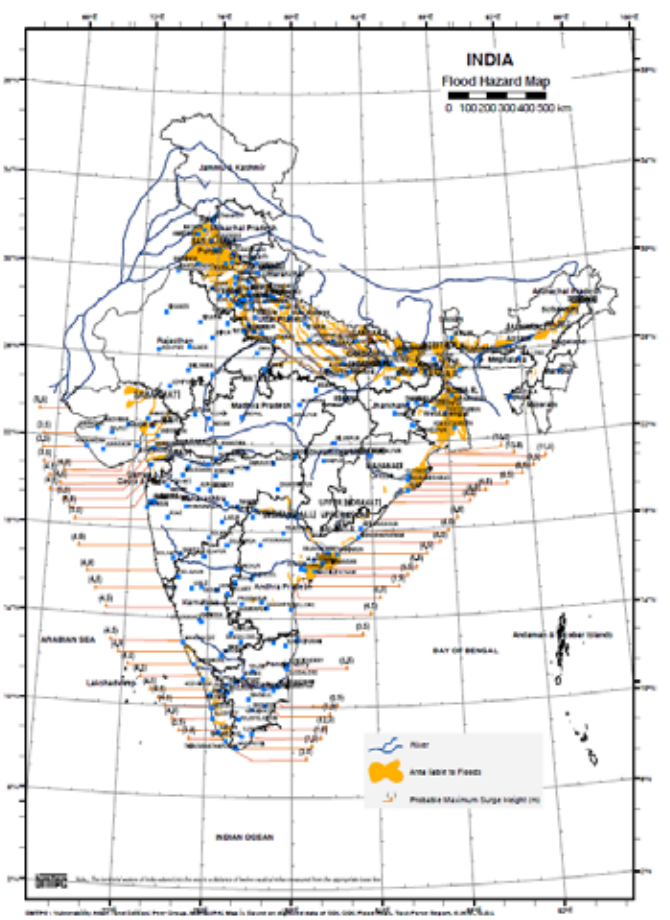

Annex 5 : Wind & Cyclone Vulnerability Zones of India

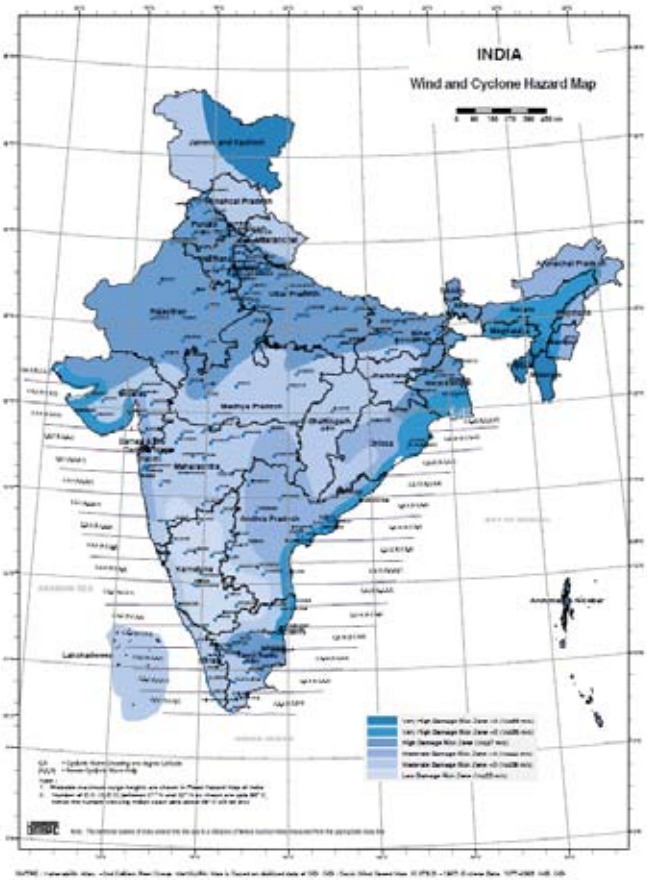

Annex 6 : Multi Hazard Map of India

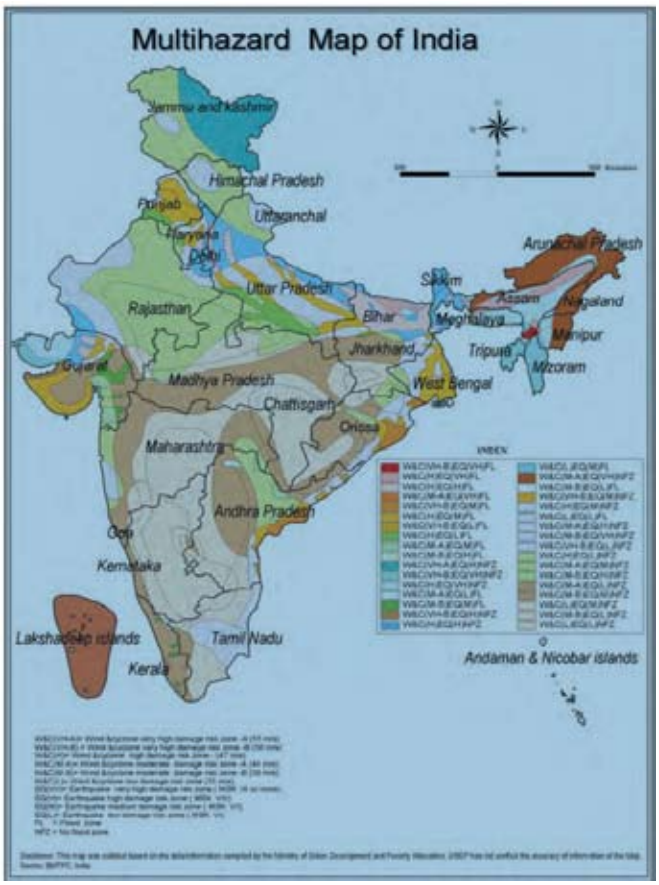

2. DISASTER MANAGEMENT OF POWER AND COMMUNICATION SYSTEM

2.1 Disaster Management of Power System

Power is a concurrent subject of Center and States. Generation & Transmission under Center including UTs is the responsibility of central PSUs (Power grid, NTPC, NHPC and NPC) and that including Distribution fall under the States thru their SEBs (GENCOs, TRANSCOs, DISCOMs). The Planning & Scheduling of Power System is centralized (Min of Power, Min of Non-conventional, CEA) in coordination with Central PSUs and concerned State Ministries and Power Utilities.

Disasters generally cause interruption in power supply and post recovery of power supply after disaster requires well planned, well thought, well coordinated and most feasible to implement. Distributed generation (PV Solar, Storage battery, fuel cells, compressed air etc.) and microgrids are now accepted means to improve the reliability of electricity supply at their host site and acting as uninterruptable power supplies. Microgrids bring additional benefits, such as improved reliability (no single point of failure), lower emissions through providing for renewable energy supply, and even allowing for the export of power to wider areas of the electricity system. To reduce the cost of microgrids and increase their uptake, a "plug and play" mechanism needs to be developed, allowing for simple addition of devices to – or reconfiguration of – the microgrid, without the need for major additional engineering. National / international institutions shall develop standards on microgrid suitable for implementation in disaster prone areas.

2.2 Power Generation

2.2.1 Each PSU & GENCO is responsible for operation, maintenance and modernization for efficient working and to meet the Generation schedule as per RLDC / SLDC forecast. Each facility has its own communication system with RLDC and RLDC in turn has communication links with SLDC for coordination & balancing of generation (state & share of central generation) as per load forecast. Each PSU has their plan for Disaster Management in compliance with NDMA's Disaster Management Guidelines

2.2.2 Nuclear Power Corporation (NPC) (Ref 4)

The communication facilities available with NPC have been recognized as a part of Disaster Management by NDMA as under:

Sub sec 3.2.9 of Chapter 3: Existing Communications Base and ICT Support-Situation Analysis of National Disaster Management Guidelines- National Disaster Management Information and Communication System (NDMICS)-2011/publication of National Disaster Management Authority, New Delhi-Feb 2012 has recognized Network of Department of Atomic Energy (DAE)

The DAE has established a communication network, which essentially consists of three wide area networks (listed below) interconnected through a gateway:

(i) ANUNET set up and operated by DAE for various applications, including secure intercommunication of data, voice and video in addition to grid computing, linking headquarters of all the units and also the aided institutes, and a number of other sites of DAE;

(ii) NPCNET of Nuclear Power Corporation that has interconnected all its plants and project sites; and

(iii) HWBNET Heavy Water Board (HWB) that has interconnected all its plants.

2.2.3 *Vulnerability Map of Electricity Generation Infrastructure in India*

The Power house infrastructure is to be strengthen as per their specific perquisites (hydro, thermal and Nuclear). Renewable sources of generation (Solar, wind, bioenergy, Energy storage batteries, compressed air storage, etc.) are less prone to damages and easy to recover back. As such, Renewable energy resources shall be planned and scattered over the disaster-prone areas for meeting emergency requirement of power for vital installations as also start power to generating stations in case of damage to existing feeder(s).

2.3 Transmission System (Transmission Lines & Substations)

2.3.1 The transmission lines and associated Substations are scattered all over the country and experience the brunt natural and manmade disasters. The transmission and distribution system are designed, built and operated as per national / international standards, National Regulations, Codes of Practices, Safety Regulation, Operational and Maintenance Regulation, etc. These standards, manual, codes, regulations are based on climatic, earthquake, lightning, national damaging events and the outcome of research and development leading to quality improvement, prediction of probability/ reliability.

Recognizing greenhouse gas effect of CO2 and its major contribution to global warming impact thru temperature rise, climate disasters (devasting floods, high speed wind storms & cyclone, earthquakes, tsunami, heat waves, dry spells), the Global community including India has initiated action plan on Disaster Management.

2.3.2 The Central Agencies (Min. of Power/ Min. of Non-conventional/ CEA) and Power grid (CTU) and State Agencies (State Ministry, TRANSCOs & DISCOMs) are responsible for planning and executing Disaster Management Plans to meet natural and manmade disasters.

Sub sec 3.2.8 of Chapter 3: Existing Communications Base and ICT Support-Situation Analysis of National Disaster Management Guidelines (Ref.4) has recognized availability of Optical fibre communication network facilities under POWERTEL, the telecom arm of Power Grid interconnecting all the RLDCs and their further connection with SLDCs all over India in Disaster Management thru OPGW network on its transmission lines to provide connectivity to the talukas & Panchayats falling within its corridors of transmission network; Sharing its rugged and sturdy transmission tower infrastructure for installing GSM radio antennas to provide connectivity to district HQ/ Talukas & Panchayats falling with in the corridor of 50 Kms of its transmission network; Gearing up to provide MPLS (Multi-Protocol Label Switching) based services & Data Center ; Range of services offered includes interalia, provisioning of leased circuits and IP leased circuits, Video Conferencing, VoIP etc.; Emergency Restoration System (ERS) in case of tower failures as also restoring communication network on OPGW.

2.3.3 The CTU, STU and DISCOMs in disaster prone areas shall have their own or enter into MOU with the equipment suppliers and service contractors equipped with mechanized equipment (bucket boom cranes, ERS, drowns, etc.) and trained skilled workforce capable of working under hazardous conditions to enable rehabilitation of damages

2.3.4 *Microgrid as an alternative for supply of Emergency Power*

A microgrid is collection of controllable and physically close generators (Solar PV and storage battery, Fuel cells, EV chargers, Compressed air & condensed liquid storage, mechanical storage etc.) managed in careful collaboration with local loads. By relying on a variety of generators and by closely managing local supply and demand, the microgrid can ensure that essential services are met, despite constraints that may exist on electricity supply. Whilst often viewed as a means of encouraging the uptake of renewable energy, or addressing challenges of peak demand, microgrids can make a significant contribution to helping with disaster preparedness and recovery.

2.3.5 *Use of High Temperature Conductor (Ref 5)*

In case of areas exposed to high temperature, High temperature conductor may be used. CEA document: 'Guidelines for Rationalized Use of High Performance Conductors- Feb 2019' is already available on use of HT

Conductor alternatively reduce load on overloaded TL / Distribution feeder and re-route the power thru other TLs / feeders or construct new feeders.

2.3.6 *Digitized Maps, GIS Map and Apps for Emergency Response*

The Transmission lines and S/Ss and Distribution feeders and distribution S/Ss in the designated disaster areas shall be converted to digital mapping and these digital maps are used to represent all features of a given area at the same time. The digital maps be used for identification and assess damages as also use of drones to take closure looks of the affected site and make estimate of material and workforce for repair and thereupon initiative to deputing requisite workforce and source material to site.

2.3.7 *Central Agencies for Early Warnings in case Natural Disasters / Hazards (Ref 6)*

The Table placed at Para 1.3 above names the Central Agencies designated for Natural Hazard – Specific Warnings categorize 8 types of Hazards but is silent on Cyberattack on various services (power, health, banking, communication) crippling the economy of whole country. The agency/ agencies involved in countering and implementation of preventive measures need also to be incorporated in the Table at Annex 2.

The compliance with international standards against Cybre Attack are i) ISO/IEC 27001:2013, Information technology – Security techniques – Information security management systems – Requirements; ii) ISO/IEC 27002:2013, Information technology– Security techniques – Code of practice for information security controls; iii) ISO/IEC 27031:2011, Information technology – Security techniques – Guidelines for information and communication technology readiness for business continuity; iv) ISO/IEC 24762:2008, Information technology – Security techniques – Guidelines for information and communications technology disaster recovery services

2.4 Distribution System

Distribution system under DISCOMs are more prone to damage under hazardous conditions and result in breakdown of power supply to its consumers. The distribution network need strengthening/hardening. CEA have formulated 'Standard Feeder Code' for identification of each feeder (Rural & Urban) and monitor its status.

2.4.1 The suggestion made for revalidating of standards for equipment and codes for operation and maintenance for Transmission Lines and use of HT conductors are also hold good for Distribution system

2.4.2 *The additional suggestions for distribution system are as under:*

(i) Conversion of O/H to U/G Distribution

The distribution network exposed to natural hazards required strengthening thru converting O/H distribution to underground distribution and Central Government has made financial provisions for conversion.

(ii) Conversion of LV to HV Distribution

The LV distribution network to be upgraded to HV distribution with multi source of power supply and provide storm guys and provide reclosures and provide LV distribution in the last mile with small pole mounted single / three phase distribution transformers to reduce incidents power disruptions and limit extent of damage. The clearance in case of O/H lines shall be increase considering the flood levels experienced during previous disasters.

(iii) Warning Signals on Poles

The existing distribution network supports/ Poles exposed to flooding shall be provided with warning signs against electric execution to safeguard evacuation teams during flood disasters as also provide storm guys, strengthened foundations and poles

(iv) Conversion of Outdoor S/S into Indoor S/Ss

The distribution stations exposed to flooding shall be put into shelter with higher height plinth particular for control panels, cable termination kiosks and provide water drainage pumps alternatively go for SF6 S/Ss with provision of control and relay panels at higher level/ floor

3. DISASTER COMMUNICATION /EMERGENCY COMMUNICATIONS NETWORK FOR DISASTER MANAGEMENT

Though application of communication technology has a role in all the four distinct phases of disaster management (mitigation, preparedness, response and recovery), new communication and information technologies that have emerged over the last two decades lend themselves to greater possibilities of integration of different communication systems. The interoperability of various communication systems including internet, mobile phones, fax, e-mail, radio and television is increasingly becoming functional. As a result, the possibilities for application of communication technologies in mitigation and prevention of disasters are also increasing. Before disasters strike, telecommunications can be used as a conduit for disseminating information about the impending danger thus, making it possible for people to take the necessary precautions to mitigate the impact of these hazards. Other telecommunication applications, including remote sensing and global positioning system (GPS), have critical roles to play in tracking approaching hazards, alerting authorities, warning affected populations, coordinating relief operations, assessing damages and

mobilizing support for reconstruction. It is clear therefore that telecommunications play a pivotal role in disaster prevention, mitigation, and management.

During disasters, the normal communication means & devices may get lost, for establishing communication with remote areas, the Satellite communication provides the facility of covering areas (national and international) using one or several satellites. Low Earth Orbit (LEO) satellites orbit around earth at a distance of few hundred kilometers providing the facilities of remote sensing etc.

Wireless communication modules (Portable Motorola VHF models, Codan NGT SRx,etc.) as also a Portable Repeater system VHF from a vehicle for the long distance communications as they use satellite signals for communication and would provide communications around the area of the disaster. The subsequent paras list out various provisions for communication during disaster management. (Ref:7}

3.1 National Disaster Communication Network (NDCN) (Ref 7)

The National Guidelines on National Disaster Management Information and Communication System (NDMICS) -Feb 2012 have been formulated to provide assured multi services of audio, video and data augmented with GIS-based value-added information to the various stakeholders. The major components of NDMICS are: i) National Disaster Communication Network (NDCN) for providing telecommunication backbone, which would be utilized for disseminating value added information; and ii) Information on GIS platform in the form of Vulnerability Analysis and Risk Assessment (VA&RA) and by a Decision Support System (DSS), in addition to the normally required, voice, video and data transmission. The NDCN be a "network of networks" created by leveraging all existing terrestrial and satellite communication networks including NICNET, SWANs, POLNET (Police Telecommunication Network), DMNET (ISRO) etc. that would be connected to various Emergency Operation Centers (EOCs) at National (NEOC), State (SEOCs) and Districts (DEOCs) Levels through appropriate routers and gateways.

NDCN, built with adequate redundancy and diversity, be assured through an additional satellite-based communication link from NEOC to the last mile at disaster site. Similarly, the dedicated bandwidth required for disaster management at various levels of administration would be guaranteed through Service Level Agreements (SLAs) with various operators. Further to ensure last-mile connectivity, a mobile communication package at the district collector level and a transportable communication van at the NDRF level will be provided by NDMA to establish graded communication capability at the disaster site. Continuous monitoring for compliance to assure bandwidth from the operators would be carried out through Network Management System (NMS) located at NEOC.

The Guidelines have been prepared with a view to provide the necessary guiding principles to the Central ministries/ departments and the State governments for establishing a communication network to meet the requirements of dedicated disaster communication.

Spectrum Earmark for Public Protection and Disaster Relief (PPDR) Communication:

Requirement of public protection and disaster relief (PPDR) communications is proposed to be considered, as far as possible, in the frequency bands380-400 MHz, 406.1-430MHz, 440-470MHz, 746-806MHz, 806-824/851-869 MHz, 4940-4990MHz and 5850-5925MHz on a case by case basis depending on specific need and equipment availability

4. CONCLUSION

(i) National Disaster Management Authority (NDMA) has issued Guidelines on Disaster Management stressing upon Center & States for implementation thru 24x7x365 fully staffed & fully equipped Disaster management centers and carry out mock drills and periodical training by Disaster Management Institutes.

(ii) Power and Communication installations bear the brunt of natural and manmade disaster and Digitized Map with GPS& Apps of disaster-prone transmission lines & Distribution feeders, communication installation and facilities along with special communication devices (Satellite Phone, Two-Way Radio, Citizens Band Radio, Amateur Radio/HAM Radio) shall be made readily available for information dissemination and initiating recovery measures

(iii) Digitization of health services, banking & trading facilities, industries, communication centers & induction of e-Mobility and cashless transactions need uninterrupted around the clock power supply. Solar PV Farms including battery storage, fuel cells and Micro-grids to be identified for the above services

(iv) Residents and commercial establishment be encouraged to deploy roof PV installation and solar PV park with storage batteries & EV charging stations for power supply in case damage to utility network

(v) The Utilities in disaster prone areas shall enter into MOU with the equipment suppliers and service contractors equipped with mechanized equipment (bucket cranes, ERS, drowns, etc.) and trained skilled workforce capable of working under hazardous conditions to enable rehabilitation of damages

(vi) Distribution system under DISCOMs are more prone to damage under hazardous conditions and need strengthening/ hardening thru use of storm guys, providing warning flags on poles against electrical execution, high strength poles and reinforced concrete foundations, convert Overhead distribution lines to underground cable system, convert LV distribution to HT distribution and use small rating pole mounted Single /3 phase transformers for power distribution. CEA have formulated 'Standard Feeder Code' for identification of each feeder (Rural & Urban) and monitor its status

(vii) The maps of wind, temperature, flood vulnerability, seismic, national Calamity need frequent updating on the basis of measurements made during the events and national standards / codes for equipment and installation to be revalidated as these issues have damaging effect on country economy and resources.

REFERENCES

1. Disasters as per World Development Report (IFRCRC,2001)
2. Min. of Home Affairs, GoI.: Disaster Management in India adopted in 2011
3. National Disaster Management Authority, GoI.: 'National Disaster Management Plan (NDMP)'-May, 2016
4 National Disaster Management Authority Feb 2012// NDMICS-2011 : 'National Disaster Management Information and Communication System', Feb 2012
5 CEA document: 'Guidelines for Rationalized Use of High Performance Conductors- Feb 2019'
6. TRAI India Experiences in Developing Disaster Communications Plans TELECOM REGULTORY AUTHORITY OF INDIA and Early Warning Systems)
7. National Institute of Disaster Management East Asia Summit & Earth Quake Risk Reduction Centre Meeting at Delhi: Disaster Communication

Tackling the Challenges in the Power Sector Employing Smart Energy Management : A pragmatic Approach

Partho Pratim Chatterjee
Aditya Bioinnovation Private Limited, Nagpur

Dr. Pradeep Kumar Chatterjee
MECON Limited, Ranchi

ABSTRACT

With distinct gap between supply and demand of power in India, there is a dire need to tackle the challenge. The surplus installed capacity needs to be backed up by a corresponding increase in demand. To this effect, aspects pertaining to both the supply side and the demand side need to be addressed. Towards supply side, the possible eco-friendly alternatives could be harnessing alternative sources like solar energy, onshore and offshore wind energy, hydroelectric power, wave energy, tidal energy, Ocean Thermal Energy Conversion etc., and integration/interlinking of these sources with storage provision. On the demand side, the possible alternatives could be adoption of electric cooking, electric mobility etc. Further, the adoption of capacity subscription philosophy by power ecosystem cohorts namely power generating entities, power distribution entities and the ultimate end users could prove beneficial. In this backdrop, the paper dwells upon the Indian scenario and the corresponding panacea.

Electrical energy is one of the fundamental needs for the socio- economic welfare of the masses, society and nation as a whole. Being prime mover, it is the basic requirement of a nation and its growth directly affects the growth in Gross Domestic Product (GDP). India is the third largest electricity producer and consumer in the world, after China and The USA. Yet more than 14 % of its population of over 1.3 billion, mostly in remote areas, still do not have access to quality electricity. Yearly per capita electricity consumption in India is a low 1181 kWh, far below China's 4475 kWh. The path breaking measures are yet to pay dividend, as supply is not at the desired level with respect to stability and quality and is affected by power cuts, brownouts, blackouts, breakdowns and non availability in remote/rural areas.

For electrical energy generation, transmission and distribution, the costs (i.e investment cost, operation & maintenance cost etc.) are substantial. It is resource intensive, and hence calls for contemporary/ alternative technology at optimum cost and feasible applications for favourable Socio-Economic Return on Investment (SE-ROI). India, historically has been dependent upon fossil fuel based thermal generation at large to meet base load requirements which indeed is an environmentally unsustainable way of energy generation. [Chatterjee, 2019]

THE INDIAN SCENARIO

The reduction in power demand during COVID -19 lockdown explains that the demand of power depends largely on the level of socio-economic activities. Meeting the full demand would be a function of available generation, access to load centres and the techno-financial health of electricity distribution companies (Discoms). India had a total generating capacity of 368 GW as on January 2020, whereas the maximum peak demand reached so far was around 183 GW. The renewable energy capacity has doubled over the last 5 years; to become almost 23% of the installed capacity of utilities (85 GW), even though electricity generated from renewable energy sources is still only 9 %, due to the low Capacity Utilization Factor (CUF) of about 14-15%. The aggregate power demand is directly proportional to the growth rate of the Gross Domestic Product (GDP). The GDP growth rate of 8-10 % was used in the demand projection in the 18th Electricity Power Survey (EPS: 2012-2017) and consequently, actual demand remained much below the projected one. Income elasticity of electricity demand is found higher in the relatively less developed eastern region, leading to higher growth in electricity demand with increasing income. Relatively slower growth rate in electricity demand has been observed in developed states, although in absolute value they are quite high. Energy efficiency schemes such as solarization of agri-pumps, Perform, Achieve and Trade (PAT) for designated industries, LED bulb campaigns, use of advanced glasses in offices having high selectivity (high light transmission in visible spectrum and low heat transmission in infrared spectrum) and the standards and the levelling programs (Star rating) are likely to reduce electricity demand on the grid.

The demand for electricity is also influenced by seasons, rainfall, population growth, climatic variations, technological changes, consumer preferences, availability of alternate

energy sources. Government incentive schemes, such as make in India, dedicated freight corridors, Faster Adoption & Manufacturing of Electric Vehicle (FAME) and so on are likely to increase electricity consumption. On a conservative estimate, the Central Electricity Authority (CEA) has projected peak demand to be 201 GW and 293 GW in 2022 and 2030 respectively. Generation planning in the country has not conformed to international best practices. Review and enforcement of resource planning have been missing at the tariff regulation stage too. As on date generation capacity in the country stands much above the expected peak demand. The International Energy Agency (IEA) recommends reserve margin of 15% , but reserve margin in India has been as high as 50.94% in 2011-12 and 71.78 % in March 2017. It now stands at 100 % which indicates a distinct gap between supply and demand. With surplus installed capacity, India needs to accelerate electricity usage in the form of electric cooking, solarization of agri-pumps, electric mobility (incentivizing electric vehicles through lower tariffs), electrification of railways, rural electrification, etc. India is now committed to 450 GW of renewable energy (Verma, 2020). India has initiated the multi-nation International Solar Alliance with headquarters in Gurugram. We should, therefore, explore new opportunities of cost effective storage technologies (encompassing battery storage with high energy density, hydro pump storage, compressed air storage, etc.), diversified uses and overseas trade of electricity to utilize full capacity of electricity.

THE PANACEA

To resolve/tackle these pressing issues/ challenges, the possible alternatives on supply side could be harnessing alternative resources like Hydroelectric Power, On-shore and Off-shore Wind Energy, Tidal Energy, Wave Energy, Ocean Thermal Energy Conversion (OTEC), Solar Energy, etc, and integration/interlinking of these sources in a techno-economically viable manner. India's long coastline of more than 7500 km with several littoral states provides ample opportunities for harnessing natural resources like On-shore and Off-shore Wind Energy, OTEC, Tidal Energy, Wave Energy etc. On the demand side the possible alternatives could be adoption of electric cooking, electric mobility etc. Further, the adoption of capacity subscription philosophy by power ecosystem cohorts namely power generating entities, power distribution entities and ultimate end users could prove beneficial.

In view of the above, harnessing eco-friendly sources and eulogizing and augmenting Energy Systems Integration (ESI) in conjunction with smart energy management encompassing capacity subscription with a penchant for solving critical issues is a dire need of the hour towards supply side and demand side respectively. ESI involves integration/interlinking and coordination among various constituents of energy systems to deliver technically dependable, efficient, economically viable and environmentally sustainable quality solutions. It may, at times, require an iconoclastic approach. In the era of 3Cs (Creativity, Competence and Candidness), 4Ds (De-carbonization, Decentralization, Digitalization, and Democratization) and 3Ps (People, Planet & Prosperity), strict adherence and concrete adhesion by/between the concerned stake holders in the energy ecosystem is of paramount importance to tackle the pressing issues. And to ameliorate the exacerbating gap, which cannot be bridged by these alternative sources of energy if they act as standalone entities, energy system integration/interlinking (ESI) is indispensable. This may be challenging, but quintessential. ESI casts the expertise/ knowledge of diverse fields like Engineering, Management, Economics, Public Policy, Social Science, etc. to an ingot mould and then forges the ingot stripped out of the mould to address the pressing real life issues / challenges in a pragmatic manner. Multi disciplinary approach is the essential stanchion for holistic development in this transient and VUCA world and ESI extols the same.

The above idea could be elucidated with the help of the following illustration. Let us assume that an investor has to establish an Ocean Thermal Energy Conversion (OTEC) Project. The feasibility of the project depends on technical as well economic viability. The technical viability of the project in a particular geographical location would depend on geo-physical terrain like presence of tropical sea and technology accessible for harnessing the potential. The economic viability would be determined by the cost squandered due to power losses during the transmission. If deep sea conditions prevail in close proximity of the coast, generating power by OTEC proves to be highly economical as it mitigates power losses to greater extent during transmission.

The presence of deep sea conditions near the coast is found to be probable in the cases where the rivers are flowing through a rocky terrain/rift valley and hence, they do not accumulate sediments before reaching the sea forming estuary. As sediments deposited are meager in the case of rivers draining into the Arabian sea like river Narmada, Tapti, Mahi, Sabarmati, etc., deep sea conditions become prevalent at close proximity to the coast making OTEC more techno-economically feasible. Whereas, in the case of rivers draining into the Bay of Bengal, like river Ganga, Godavari (Dakshin Ganga), Kaveri (Ganga of South), Mahanadi, Meghna, etc. flowing through plains and hence they do accumulate sediments before reaching the sea and forms delta. As sediments deposited are prolific, deep sea conditions become non-prevalent at close proximity to the sea coast making OTEC techno-economically doubtful. Another possibility

could be establishing offshore wind turbines coupled with HVDC transmission in locations having shallower seas near the coast and make the project techno–economically feasible. Setting up solar panels would be another techno-economically feasible proposition in the Sub-Tropical High Pressure (STHP) belts. These belts receive a high intensity of sunlight and scanty rainfall. The sunlight is received without interruption from clouds. Also, scanty vegetation, forest cover and scarce inhabitation ensure undesirable shading effects. Hence, Capacity Utilization Factor for solar panels in these areas is high.

As we know, the traditional methods of energy generation using renewable sources which are in vogue widely include hydel, solar and wind. One must appreciate that relying solely on solar and wind energy cannot be a sustainable option in the long run. This is because solar and wind are intermittent in nature and are non dispatchable energy resources and cannot be used as base load because of their unpredictable and fluctuating nature. Their supply cannot be increased or decreased as per instantaneous demand as they are largely dependent on the forces of nature.

Therefore, to prevent brownouts or blackouts in the case of a sudden rise in instantaneous demand, bolstering solar & wind energy source with hydel units is essential. This is because only the hydel power station has the capacity of providing fast frequency stabilization in the case of sudden rise or sudden drop in demand in an eco-friendly and environmentally sustainable manner. In this respect, it is prudent to mention that Thermal Power Plants (TPP) and Nuclear Power Plants (NPP) do not have this ability to adjust energy supply instantaneously. Unlike voltage stabilization, which can be controlled by capacitor based reactive power control mechanisms, frequency stabilization has to be effectively managed by accurately matching the instantaneous energy supply with the instantaneous energy demand at that point of time i.e. by varying the active/true power. Otherwise, an abrupt increase or decrease in the synchronous speed of the turbine generators may lead to isolation of generators from the grid to prevent damage.

Further, because solar and wind sources being intermittent and variable in nature, output from solar panels and windmills has to be stabilized using power convertors to match the frequency of transmission. The stabilization involves frequency stabilization using electronic power convertors like Inverters, Rectifiers etc. leading to smaller inertia for these systems. For solar power plants, optimum power output is obtained by Maximum Power Point Tracking (MPPT) technique (Boyle 2012). In the case of windmills, power is generated using induction generators or asynchronous generators which draw reactive power from the grid and not by synchronous generators because of variance in wind speed. To the contrary, generators rotating at synchronous speeds and powered by Hydraulic Turbines (like Pelton, Francis & Kaplan) have a larger inertia and can respond/adjust better to supply-demand fluctuation/variation in an eco-friendly manner. It would be prudent to mention that Hydroelectric power plants have high energy conversion of around 90 %. (Nag 2015) These plants do not convert heat into work, hence the limitations posed by the second law of thermodynamics and heat loss by heat transfer modes like conduction/ convection/ radiation do not apply to them. Also, the working fluid (water) is in the liquid state and the same magnitude of power could be generated at lower angular speed than steam powered turbines which employ less dense gaseous steam as the working fluid. This results in reduction of centrifugal forces on the rotating components of the turbine leading to a longer life cycle. There is negligible latency period in hydraulic turbines and they can start producing power almost instantaneously. This is not possible in case of coal or nuclear powered steam turbines. To the contrary, the efficiency of solar photovoltaics and windmills is around 30 % and 50 % respectively only. The efficiency of solar photovoltaics is limited by the restrictions imposed by Band energy gap. The efficiency of windmills is limited by the restrictions imposed by Betz limit.

The above musings could be an ideal shot in the arms of the state to compliment the Saubhagya Electrification Scheme by using the surplus energy to power energy intensive appliances in both rural and urban households like induction cook-tops, refrigerators, water pumps, air conditioners, hot air blowers, irrigation pumps, charging electric vehicles, etc. For example, in case of induction cook-tops with high power factor (> 0.84), the high value of true power provides efficient heating without the release of exhaust gases. However, in the case of LPG gas stoves, a lot of undesirable heat gets wasted as heat from the exhaust gases cannot be recovered and they exacerbate global warming

State can also promote electrification of highways (based on RFID), railway freight corridors, etc. to increase consumption of electricity apart from reducing emission of green house gases (GHGs) and global warming, energy wastage, oil imports thereby minimizing stress on trade deficit, balance of payment (BOP), dependence on other nations during normal as well as adverse periods, vulnerability to economic shocks, etc. to have socio-economic benefit. Electrification is necessary because of the following technical reasons which lead to economy of cost, time and efforts. For example, the efficiency of a diesel engine is around 40 % whereas that of electric engines is around 90 %. Electric engines have much better torque-speed characteristics than Internal Combustion (IC) engines. Electric motors can provide much higher torques at lower speeds, making them

highly suitable for heavy loads. Electric vehicles have a relatively simple transmission system than IC engines, leading to lower frictional losses, greater durability and reliability. As the energy density of contemporary batteries is low, range anxiety in electric vehicles can be relieved by directly drawing power from overhead electric cables. This also reduces the vehicle payload and makes the vehicles less voluminous as batteries are not present. Therefore, usage of electric engines for heavy duty applications like goods transport, etc. can improve energy efficiency to a great extent. This can be bolstered by techniques like regenerative braking in electric engines, in which the power extracted during braking can be fed back to the grid (at this instant, the induction motor behaves as an induction generator having rotor speed greater than synchronous stator speed). This is in consonance with the principle " A unit of Energy Saved is equal to more than a unit of Energy Generated" .

At instants where energy supply exceeds energy demand, the excess energy can be utilized for other fruitful purposes like charging Electric Vehicles, or to produce Hydrogen by electrolysis of water for operating Hybrid vehicles or to produce potable drinking water for later consumption or to pump water to reservoirs at heights which can be used at later period for power generation during peak hours.

CAPACITY SUBSCRIPTION

To this effect, adoption of capacity subscription model may prove beneficial. Capacity subscription is a mechanism in which even domestic consumers sign agreement with power utilities companies to consume fixed units of electricity beforehand, stimulating Demand Response. In a market based economy, capacity subscription offers a plethora of advantages to all the cohorts in the power ecosystem comprising generation entities, transmission entities, distribution entities and ultimate end user. In case of power generating entities, capacity subscription is beneficial as they are in a position to take decision regarding how much power they need to produce beforehand. Such prior information helps in minimizing operational expenditure (OPEX) by optimizing the variable cost elements like cost of fuel (fossil fuel), etc. which is relatively substantial w.r.t wind, solar or hydel. This is true particularly for generation entities like coal fired steam turbines, combined cycle gas turbines (CCGT) and open cycle gas turbines (OCGT) which involve high variable costs of operation in order of merit. (Zweifel et. al. 2017) It helps them to avoid maintaining power reserves in large quantities as they have a better idea of the energy demand beforehand. Due to prior knowledge of power demand, the generation utilities are cognizant about the extent to which they need to turn to generating units which run on high variable cost like OCGT or CCGT because they have a clear idea of the energy consumption beforehand. Thus, optimization of variable cost elements increases the return on investment (ROI) thereby minimizing the business risks. The Power Transmission entities are relieved from the stress of large supply and demand fluctuations on the macro scale. But in case of power distribution entities, Capacity subscription is beneficial, as they are in a position to take decision regarding how much power they need to distribute beforehand. Such prior information helps in minimizing capital expenditure (CAPEX) by optimizing the fixed cost elements towards cost of as erected distribution lines mainly about cables as they have a better idea about the technical specifications/ cross section of the wires they need to install due to power load in capacity subscription as energy consumption can be approximated better in this capacity mechanism. Thus, all these factors help incentivize investment in capacity subscription.

In the case of ultimate end user, capacity subscription is beneficial because it stimulates demand based response. Ultimate end users may ink capacity contracts in advance. Therefore, it is more economically viable for them to limit their electricity consumption and avoid unnecessary revenue payment to Discoms. It instils a sensible approach and more discipline among the consumers/end users and helps them to optimize energy consumption. This in a way is also beneficial for reducing GHG and global warming at the end user's end.

Thus, such an intricate study would involve the coordination among a plethora of diverse institutions and corporate disciplines like Geography, Geology, Electrical & Electronics Engineering., Mechanical Engineering, Ocean Engineering, Civil Engineering, Management, Economics, Public Policy etc. as project success cannot be ensured in reclusion. The need for painstaking research in the field of ESI is increasing rapidly in this age of the 3Cs, 4Ds and 3Ps.

With ESI philosophy, Global Electrical Power Grids can become viable. This would ensure that the uncontrollable renewable energy resources like solar and wind energy would become available globally and perpetually. This is because the deficit of energy in one region can be compensated by a surplus of energy in another region. For example, excessive power generated in the form of solar and wind power in countries like Australia (in the southern hemisphere) during summers could be used to provide power instantaneously to cold countries like Norway, Sweden, Finland etc. in the northern hemisphere subject to techno-economic feasibility. The demand of electricity during winter in these countries peaks up due to the use of power intensive heating appliances. Also,

electricity can be used almost instantaneously because of its high speed and zero latency period between source and destination.

It is prudent to mention that it is advisable to transmit power from source to user rather than storing energy as very large scale battery storage is a costly affair due to the limited energy density of the devices. However, for transmission, High Voltage Direct Current (HVDC) or 3 Phase High Voltage Alternating Current (HVAC) should be preferred. (Buchla et. al. 2017). This is because at high voltage, the value of current used for transmission reduces resulting in low heat loss due to Joule's heating effect as the heat generated is directly proportional to the square of the current. Further, as the value of current is low, the cross sectional area of the cables can be reduced resulting in lower capital costs. Since most of the power generating sources produce 3 Phase AC, the same has to be converted into DC by using expensive rectifiers. Even in the case of Solar Photovoltaic panels, which produce DC Voltage, the generated voltage has to be stepped up using expensive DC-DC Boost power converters. But, the main advantage with HVDC is that it has zero frequency. Hence, HVDC does not suffer from inductive losses, eddy current losses, etc. which makes HVDC highly viable for long distance transmission. However, in totality, it is a costly proposition. But, 3 Phase AC offers certain advantages. The voltage can be conveniently and economically stepped up or stepped down using 3 Phase AC Transformers (Delta-Wye, Wye-Delta, Delta-Delta and Wye-Wye), working on the phenomenon of mutual inductance. Power can be transmitted with a smooth current waveform and lower heat loss. Also, capacitors can be used to control the voltage without incurring power losses as reactive power shuttles to and fro from the source to the load without dissipation.

CONCLUSION

The capacity subscription model may appear difficult to comprehend for some cohorts like end users in the initial stages because of a newness/ uniqueness. It may also pose some challenges for the regulators. However, we must remember that "Today's pain is Tomorrow's gain". All the cohorts/stakeholders need to cooperate to make this mechanism successful for the benefit of one and all. Awareness programs/ drives emphasising the benefits and the practicalities should be conducted at mass scale to make the end users/consumers cognizant of the distinct benefits they are going to have from this mechanism and to motivate them to cooperate with the authorities for its hassle free implementation. For success of such novel initiative, public acceptance plays an instrumental role apart from technical efficiency, economic viability and environmental sustainability.

REFERENCES

Boyle Godfrey, Renewable Energy : Power for a Sustainable Future, Oxford University Press, New Delhi, 2012 p 95

Buchla David M, Kissell Thomas E, Floyd, Thomas L, Renewable Energy Systems, Pearson India Education Services, Noida, 2017, p 431

Chatterjee P. P, Integration of Solar and Wind Energy to generate piezoelectric potential difference, Journal of Resources, Energy and Development, Vol 16, No 1, March 2019 pp 1-8

Nag P K, Power Plant Engineering, McGraw Hill Education (India) Pvt. Ltd, New Delhi, 2015 p 665

Verma A. K, The Dilemma of Power Demand, The Financial Express, New Delhi, 20th April 2020

Zweifel Peter, Praktiknjo Aaron, Erdmann Georg, Energy Economics: Theory and Applications, Springer Nature, Berlin, Germany, 2017, p 279

One Sun, One World, One Grid (OSOWOG) – A Global Electricity Grid

S.V. Dinkar
Consultant

LOK SABHA & RAJYA SABHA DISCUSSIONS

THE BIG PICTURE: ONE WORLD, ONE SUN, ONE GRID

Feasibility of such an idea

- This idea is very much feasible since countries like India (India has integrated national grid) or even big continents like Europe are connected by more or less single grid.

DRISHTI INPUT

- The total world energy usage (coal+oil+hydroelectric +nuclear+renewable) in 2015 was 13,000 Million Ton Oil Equivalent (13,000 MTOE). This translates to 17.3 Terawatts continuous power during the year.
- If the area of the Earth is covered with solar panels, even with moderate efficiencies achievable easily today, it will provide more than 174 TW power.
- So, solar energy generated in one part of the world can be taken where enough landmass is not available to generate such quantity of power. For example, the power generated in the Sahara desert can be transmitted to Europe and in turn, Europe can give up on gas if they are connected via a single grid.
- Within India itself, there are huge tracts of desert in Rajasthan and Gujarat where solar panels can generate enough power so as to meet substantially the rising demand of energy.

Challenges

- In order to see the idea come through the most important challenge is to integrate economic policy imperative and energy policy imperative. Right now these two policies are in not blended.
- Solar power depends on the efficient system of storage, which is yet to develop.
- The mineral resources that contribute to making efficient and effective battery are dominated by China.

'One World, One Sun,One Grid can become "a reality"for transmission of power becomes affordable

Devdiscourse News Desk Chennai India

Updated: 05-10-2018 04:59 IST Created: 04-10-2018 19:35 IST

The idea of 'One World, One Sun, One Grid' mooted by Prime Minister Narendra Modi can become "a reality" provided technology for transmission of power becomes affordable, IIT-Madras Director Bhaskar Ramamurthi Thursday said.

Speaking to PTI, Ramamurthi said "Today to ship solar power over 1,000 km using high-voltage direct current (HVDC) electric power transmission system, there is a certain cost, which is going down every year.

As HVDC becomes more affordable, this (one grid) will start becoming a reality and you can ship power," he said. HVDC stands for high voltage direct current, an established technology used to transmit electricity over long distances by overhead transmission lines or submarine cables.

"Once you have it, you can ship any power, not just solar. The moment you are able to do it, people can even sell solar energy...the PM's idea is very visionary but it is not going to happen overnight," he said.

Stressing that India would generate 40 per cent of power from non-fossil fuels by 2030, Prime Minister Narendra Modi earlier this week had called for connecting solar energy supply across borders giving the mantra of 'One World, One Sun One Grid'. "We have a dream One World, One Sun, One Grid.

We generate round the clock electricity from the sun as it sets in one part of the world but rises in another part. Sun never sets for entire earth," Modi said addressing the first assembly of International Solar Alliance in New Delhi.

NOW July 2020 extract: MNRE India seeks bidders to implement 'One Sun One World One Grid'

India's Prime Minister recently called for connecting solar energy supply across borders, with the mantra of 'One Sun One World One Grid' (OSOWOG).

Through the OSOWOG initiative, the Indian government plans steps towards building a global ecosystem of

interconnected renewable energy resources that are seamlessly shared for mutual benefits and global sustainability.

The Ministry of New and Renewable Energy (MNRE) is inviting proposals from qualifying consulting firms for "Developing a long-term vision, implementation plan, road map and institutional framework for implementing the initiative. Closing date for submissions of bids is 6 July 2020.

The initiative is planned across three phases

Phase I (Middle East-South Asia-South East Asia (MESASEA) interconnection): Indian Grid interconnection with the Middle East, South Asia and South-East Asian grids to share solar and other renewable energy resources for meeting electricity needs including peak demand. For this purpose, an assessment shall be made of renewable energy potential of all countries in these regions and a study carried out so as to how they can share their renewable energy resources with each other for meeting their electricity demand including peak demand and also for rationalising their tariffs.

Phase II (solar and other renewable energy resources-rich regions' interconnection): MESASEA grid getting interconnected with the African power pools to share solar and other renewable energy power of the countries located in solar and renewable energy-rich areas.

Phase III (Global interconnection): to achieve the One Sun One World One Grid vision.

TODAY YOU BURN, TOMORROW YOUR CHILDREN WILL FEEL THE HEAT

ELECTRICAL SAFETY – ARC FLASH HAZARD ANALYSIS

Sanjeev Bhatia

Member, IEEE and Member, CIGRE

ABSTRACT

Arc flash safety is one of the most important aspect while handling switchgear in the electrical distribution system.

Recently there has been continuous effort within the manufacturing industry as well as in the plant operations to determine the level of arc flash hazard, the mitigation techniques, and the methodologies for equipment labelling and safe working.

There are different International codes and standards like OSHA, NFPA, and IEEE which establish different guidelines to enhance electrical safety. The paper covers different aspects as mentioned in these codes with respect to quantifying the arc flash hazard by calculating incident energy levels, establish flash protection boundary and identification of personal protective equipment (PPE) requirements.

The paper also elaborates on different mitigation techniques to reduce the arc flash hazard that may be employed during the engineering phase.

I. INTRODUCTION

Electrical workplace safety is the critical issue for switchgear manufacturers and plant operators. Protection from internal arc flash faults is one of the most important aspect from that perspective. Arc faults are usually caused by external factors which are beyond the control of switchgear manufacturer. Typical arc faults can occur due to ingress of foreign materials, insects, rodents, forgotten material or tools inside the switchgear module, incorrect operations or interlocks.

Arc Flash Hazard defines the danger to people working on live parts.

Arc Flash Hazard Analysis defines the procedures which limit the damage on personnel due to electrical arcs, and by measuring the released energy, defines the risk areas and accordingly determines the relevant levels of the personal protective equipment (PPE).

Different international standards are available which elaborates on the equipment (mainly for MV and LV Switchgears) for production, and testing with respect to arc resistant switchgear and arc flash safety.

Besides the standard for equipment design and testing, there are US standards like IEEE, and NFPA which covers the quantification procedure for arc flash hazard that an electrical worker may be exposed during an internal fault.

An arc flash hazard analysis is performed in association with or as a continuation of the short circuit study and protective co-ordination study. Results of both short circuit and protective co-ordination study provides the information needed to perform an arc flash hazard analysis. Results of the arc flash hazard analysis are used to identify the arc flash protection boundary and the incident energy at assigned working distance throughout any position or level in the system.

There are different mitigation techniques are being used to reduce the arc flash levels which mainly includes arc flash detection principle through fiber optic solution, remote racking device, zone selective interlocking principle for bus faults.

II. KEY TERMINOLOGIES

- *Arc- Flash Hazard* : A dangerous condition associated with the release of energy caused by an electrical arc.
- *Flash Hazard Analysis* : A method to determine the risk of personal injury as a result of exposure to incident energy from an electrical arc flash.
- *Personal Protective Equipment (PPE)* : Safety device or safe-guards worn by personnel to protect against environmental hazards. PPE includes helmets, safety goggles, hearing protection, face shields, respirators, arm guards, gloves, and safety boots.
- *Incident Energy* : The amount of energy impressed on a surface, at a certain distance from the source, generated during an electrical arc event.
- *Incident Energy Analysis* : A component of an arc flask risk assessment used to predict the incident energy of an arc flash for a specified set of conditions.
- *Flash Protection Boundary* : An approach limit at a distance from live parts that are uninsulated or exposed

within which a person could receive a second degree burn if an electrical arc flash were to occur (A second degree burn is possible by an exposure of unprotected skin to an electrical arc flash above the incident energy level of 5 J/cm2 or 1.2 cal.cm2).

- *Limited Approach Boundary* : An approach limit at a distance from an exposed energized electrical conductor or circuit part within which a shock hazard exists.
- Restricted Approach Boundary: An approach limit at a distance from an exposed energized electrical conductor or circuit part within which there is an increased likelihood of electric shock, due to electrical arc-over combined with inadvertent movement, for personnel working in close proximity to the live part. The person crossing the restricted approach boundary and entering the restricted space must have a documented work plan approved by authorized management, use appropriate Personal Protective Equipment (PPE) for the work being performed and is rated for voltage and energy level involved.
- *Prohibited Approach Boundary* : A shock protection boundary to be crossed by qualified personnel only which, when crossed by a body part or object, requires the same protection as if direct contact is made with a live part.

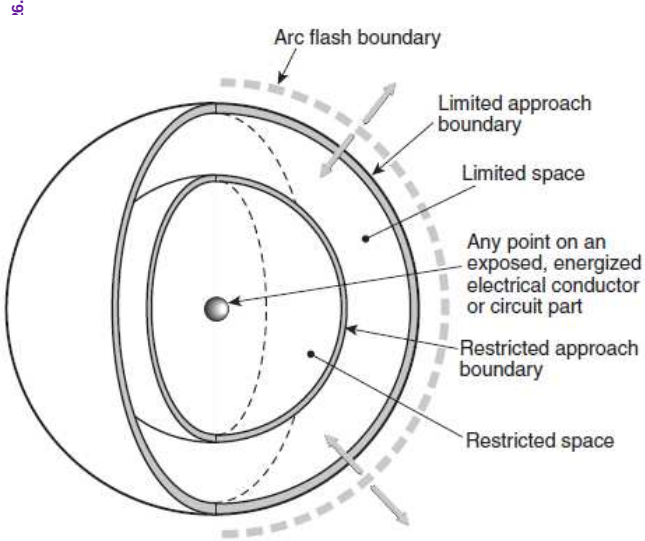

Fig. 1 : Flash Approach Limit Regions

III. CODES AND STANDARDS

There are different International codes, standards and reports which covers the design and testing of switchgear. Besides the IEC codes which mainly talks about the switchgear manufacturing design, testing and internal arc classifications, American codes (IEEE and NFPA) have elaboration on calculation methodologies to determine boundary distances for unprotected personnel, and the incident energy at the working distance for qualified personnel working on energized equipment.

A. IEC62271-200 (AC Metal Enclosed Switchgear and Control gear for rated voltages above 1 kV and up to and including 52 kV)

From arc resistant switchgear perspective, it includes:

- Broader definition of metal enclosed switchgear
- Classification of the internal arc certification (IAC)
  - IAC requirements is given by AFLR I kA/s,

    where

    A = Accessibility type A, Restricted to authorized personnel only, distance of indicators 300mm from enclosure

    B = Accessibility type B, Unrestricted accessibility including that of general public, distance of indicators 100mm from enclosure

    C = Accessibility type C, Restricted by installation out of reach, distance from indicators to be specified by manufacturer

    FLR = Access from the front (F=Front), the sides (L=Lateral), and the rear (R=Rear)

    IkA = Test current in kilo amps

    s = Test duration in seconds

Test is carried out on all compartments of the switchgear, with indicators placed at the specified distance from the enclosure. A short circuit is created within the switch gear; the short circuit current is injected for the test duration. Different criteria as specified in codes are considered for a successful test

B. IEC/TR 61641 (Enclosed low-voltage Switchgear and Control gear assemblies – Guide for testing under conditions of arcing due to internal fault)

It covers:

- Guidance for internal arc testing for enclosed LV switchgear and control gear assemblies where doors and covers are closed and correctly secured
- Assesses safety for personnel and protection for the assembly itself

Limitations:

- As a Technical Report than a standard, it is not a mandatory test procedure, but only a guide for testing under arcing condition
- Test specimen required by TR are fully equipped LV switchgear assemblies, while actual application may comprise different variations in configurations
- It only applies when equipment is completely in the operating configuration i.e. with all the doors and compartments closed, and fully latched. It does not

reduce the incident energy when access doors or panels are open and a worker is exposed to energized part Arc-resistant switchgears are mainly used in the installations in different parts of world other than US. In US, both type of constructions – non arc resistant as well as arc resistant are in use.

Even the arc-resistant switchgears are used, the use of additional protection system and mitigation techniques are highly recommended which can limit the total incident energy in case of internal arcing fault.

IEEE and NFPA codes provide the complete methodologies for calculating the arc flash incident energy, and guidelines to enhance workers' safety requirements.

C. IEEE 1584 (Guide for performing Arc Flash Hazard Calculations)

It manly covers:

- Comprehensive methodology to calculate arc flash incident energy and arc flash boundaries in threephase ac systems to which workers may be exposed
- Analysis process form field data collection to final results
- Equations needed to find incident energy and the flash protection boundary
- Software solutions alternatives
- Empirically derived model including enclosed equipment and open lines for voltages from 208 V to 15 kV
- Theoretically derived model for any voltages

D. NFPA 70E (Standard for Electrical Safety in Workplace)

It manly covers:

- Electrical safety related work practices, safety related maintenance requirements, and other administrative controls for employee workplaces that are necessary for the practical safeguarding of employees relative to the hazards associated with electrical energy during activities such as installation, inspection, operation, maintenance, and demolition of electric conductors, electric equipment, signaling and communication conductors and equipment.

To summarize, these codes (IEEE and NFPA) provides the following guidelines:

- Defining a safety program with specific responsibility
- Procedures for arc flash assessment
- Defining appropriate personal protective equipment (PPE)
- Training program for the employees regarding arc flash hazards
- Choosing suitable tools for a safe workplace
- Labelling equipment; the labels shall indicate the minimum protective distance, the energy level which can be released and required personal protective equipment (PPE)

IV. ARC FLASH HAZARD ANALSYIS

IEEE Std 1584 contains calculation methods to carry out the arc flash hazard calculation for electrical equipment rated 15 kV or less. The equations given in the standard are empirical one for voltages between 208 V and 15 kV. The calculation is used to determine boundary distances for unprotected personnel and the incident energy at the working distance for qualified personnel working on energized equipment. The incident energy level is further used to determine the proper PPE required for personnel.

The equations assess the arc flash hazard based on the bolted fault current, voltage, fault clearing time, grounding, and working distance.

An arc flash hazard analysis establishes the following specific

criteria for any given condition:

- Flash protection Boundary
- Incident Energy
- Personal Protective Equipment (PPE) in line with NFPA 70E

A. Procedure for Arc Flash Calculation

Preliminary Arc Flash Calculations should be performed at the early stage of the project with some of the preliminary data. The preliminary Arc Flash calculation is useful in equipment selection, deciding the specific relay functions and the specific arc flash mitigation techniques need to be adopted.

Final Arc Flash Calculation need to be performed before energization of the plant. Final calculation is done based on the as supplied equipment parameter, final short circuit values and relay settings. Calculations shall be performed using the actual operating configurations and for both-maximum as well as minimum fault current values.

Arc Flash calculation can be performed either by standard software program (like ETAP) or by using the standard worksheet as provided in IEE 1584.

IEEE 1584 worksheet performs the Arc Flash analysis for 100% and 85% arcing current. The worst case scenario from either of these evaluation is considered.

Different steps involved to use the inputs and carry out the Arc Flash calculation is as follows;

A1. *Step 1 – Collect the System and Installation data*

The necessary data which is normally used for short circuit calculation and protection coordination besides the equipment site and layout arrangement are collected before start of final Arc Flash Analysis study.

Annex A of IEEE 1584 provides the collection form for the required equipment information for the Arc Flash Analysis.

A2. *Step 2 – Determine the system modes of operation*

The information regarding the various modes of plant operation are required to carry out the calculation and analysis. There can be different modes of operations for example:

- One or more utility feeder in service
- Utility interface substation bus tie breaker open or closed
- Unit substation with one or two primary feeders
- Unit substation with two transformers with tie breaker open or closed
- MCC with one or two feeders, one or both energized
- Generators running in parallel with the utility supply or in island mode

The plant operating modes are important to determine maximum and minimum short circuit current values which are used as an input in Arc Flash calculation.

A3. *Determine the bolted fault currents*

The output of the short circuit results form system study calculation is used. It is important that both – maximum as well as minimum short circuit current values are computed at each voltage level. Sometimes the maximum short circuit current value may result in lower calculated incident energy due to faster protection and fault clearing.

A4. *Determine the arc fault currents*

The arc fault current at the point of concern and the portion of that current passing through the first upstream protection device need to be determined.

The arc fault current will be lower than the calculated bolted fault current due to arc impedance, especially for the applications under 1000 V.

The equations which are used to calculate the arcing current is follow:

For applications with the system voltage less than 1000 V

$$\lg I_a = K + 0.662 \lg I_{bf} + 0.0966\, V + 0.000526\, G + 0.5588\, V (\lg I_{bf}) - 0.00304\, G (\lg I_{bf})$$

Where

lg = log 10

Ia = Arcing current (in kA)

K = -0.153 for open configurations and

-0.097 for box configurations

Ia = Arcing current (in kA)

Ibf = Bolted fault current for three phase faults (symmetrical RMS)

V = System voltage (in kV)

G = Gap between conductors (in mm)

For applications with the system voltage of 1000 V and higher:

The high voltage case makes no distinction between open and closed box configuration.

A5. *Find the protective device characteristics and duration of arc*

The protective device settings and characteristics are used as an input.

For fuses, the manufacturer's time-current curve may include both melting and clearing time. Clearing time need to be used as an input. If the manufacturer's curve provides only the average melt time, then 15% value to be added up to 0.03 seconds, and 10% to be added above 0.03 seconds to determine total clearing time.

For circuit breaker with integral trip units, the manufacturer's time-current curve includes both tripping time and clearing time which can be used as an input.

For relay operated circuit breakers, the relay curves show only the relay operating time in the time-delay region. For relays operating in their instantaneous region, 16 milliseconds need to be added. The circuit breaker operating time also need to be added based on the supplier input.

A6. *Select the working distances*

Arc flash protection is always based on the incident energy level on the person's face and body at the working distance, not the incident energy on hands or arms. Typical working distances as used for different voltage levels are as follows:

Table 1 : Typical Working distances

Classes of equipment	Typical working distance[a] (mm)
15 kV switchgear	910
5 kV switchgear	910
Low-voltage switchgear	610
Low-voltage MCCs and panelboards	455
Cable	455
Other	To be determined in field

[a]Typical working distance is the sum of the distance between the worker standing in front of the equipment, and from the front of the equipment to the potential arc source inside the equipment.

A7. *Determine the Incident Energy*

Software program like ETAP can be used to carry out the Arc Flash calculation. Otherwise, IEEE 1584 standard worksheet can also be used. The standard worksheet uses the following equation to calculate the incident energy:

$$\lg I_a = 0.00402 + 0.983 \lg I_{bf}$$

Where

En = Incident Energy (J/cm2)

K1 = -0.792 for open configurations (no enclosures) and -0.555 for box configurations (enclosed equipment)

K2 = 0 for ungrounded and high resistance grounded system -0.113 for grounded systems

G = Gap between conductors (in mm)

A8. *Determine the Flash Protection Boundaries*

To find the flash protection boundary, the equations for finding incident energy can be solved for the distance from the arc source at which the onset of a second degree burn could occur.

Following equation from IEEE 1584 can be used to compute the flash protection boundary:

$$D_B = \left[4.184 C_f E_n \left(\frac{t}{0.2}\right)\left(\frac{610^x}{E_B}\right)\right]^{\frac{1}{x}}$$

Where

Db = distance of boundary from arcing point (in mm)

Cf = Calculation factor

1.0 for voltages above 1 kV, and

1.5 for voltages at or below 1 kV

En = Incident energy normalized

Eb = Incident energy at the boundary distance (normally set at 5 cal/cm2)

t = time (in seconds)

x = distance exponent (as per value for different voltages given in table 4 of IEEE 1584)

Ibf = Bolted fault current (in kA)

B. Arc Flash Hazard Analysis

An arc flash hazard analysis shall determine the arc flash boundary, the incident energy at the working distance, and the personal protective equipment (PPE) that people within the arc flash boundary shall use.

B1. *Arc Flash Boundary*

The arc flash boundary for systems 50 V and more shall be the distance at which the incident energy equals 5 J/cm2 (1.2 cal/cm2).

B2. *Protective Clothing and Other Personal Protective Equipment (PPE) for Application with an Arc Flash Hazard Analysis*

Where it is determined that the work need to be performed within the arc flash boundary, one of the following methods shall be used for the selection of protective clothing and other personal protective equipment (PPE):

- *Incident Energy Analysis*

  The incident energy exposure for the worker (in calories per square centimeter) need to be documented. The incident energy level shall be based on the working distance of the operator's face and chest areas from a prospective arc source for the specific task to be performed. Arc-rated clothing and other PPE shall be used based on the incident energy exposure associated with the specific task.

  Considering that the incident energy increases as the distance from the arc flash decreases, additional PPE shall be sued for any parts of the body that are closer than the distance at which the incident energy is determined.

  Table H.3(b) of NFPA 70E provides the elaborate detail on the selection of arc-rated clothing and other PPE for different incident energy exposures.

- *Hazard/Risk Categories*

  Table 130.7 (c)(15) of NFPA 70E defines the hazard/risk levels and corresponding incident energy levels are as indicated as follows:

Table 2 : Hazard/Risk Category Classification

Hazard/ Risk Level	Incident Energy Cal/ cm^2
0	0 < Cal/ cm^2 < 1.20
1	1.2 <= Cal/ cm^2 < 4.0
2	4.0 <= Cal/ cm^2 < 8.0
3	8.0 <= Cal/ cm^2 < 25.0
4	25.0 <= Cal/ cm^2 < 40.0

B3. *Equipment Labeling*

Electrical equipment such as switchgears, panelboards, meter socket enclosures, and motor control centers that are in other than dwelling units, and are likely to require examination, adjustment, servicing, or maintenance while energized, shall be labeled containing the following information:

- At least one of the following:
  - Available incident energy and the corresponding working distance
  - Minimum arc rating of clothing
  - Required level of PPE
  - Highest Hazard/Risk category for the equipment

- Nominal system voltage
- Arc flash boundary

V. ARC FLASH MITIGATION TECHNIQUES

The arc flash hazard is dependent on different parameters which includes voltage rating, arcing distance, short circuit current, grounding methodology and on fault clearing time. The type, location, and quantity of isolation devices as well as reducing the fault clearance time are main parameters to reduce the arc flash hazards within manageable limits.

Some of the commonly used mitigation techniques to reduce the arc flash hazard are:

- Use of current limiting devices, and fuses
- Faster arc clearing times, and sensitive ground fault protection
- Light sensing Arc Flash Detection Principle

  As an arc flash increase in instantaneous increase in light intensity in the vicinity of the fault, arc flash detection relays work mainly on the optical sensor to detect the increase in the light intensity. Based on the instantaneous increase in light intensity as arc flash relay detects the fault, it can initiate the direct tripping to upstream breaker. As the arc flash detection time is very small, overall clearing time is significantly reduced.

  The other approach for arc flash detection is to use the Fiber Optic Solution. Optical fiber is routed in switchgear construction. Whenever the fiber is exposed to an arc flash, the flash will be captured which results in the sudden increase in light intensity for the relay.

  The arc flash detection relay provides nearly the instantaneous tripping irrespective of the fault current magnitude. Since there is no coordination requirement, clearing time is reduced significantly.
- Remote racking device which helps in increasing distance between potential arc flash hazard and personnel
- Remote operation to operate the switching device – helps to keep personnel at a safe distance from the equipment
- Arc reduction maintenance switch which can be switched on while maintenance on the switchgear.

  When the Arc reduction maintenance switch (ARMS) is put in maintenance position, it will enable the faster protection by defeating the coordination and limit the let-through energy to its lowest possible level
- Transformer and Bus Differential protection
- Zone selective interlocking (Reverse interlocking) for detecting bus fault in switchgears instead of bus differential protection. In case of bus fault, the zone selective interlocking defeats the coordination and ungraded instantaneous over current relay on incomer operates. In this way, it helps in fats clearance of bus faults
- MV switchgear with integral, mechanically interlocked earth switch on all the outgoing feeders instead of temporary earthing may be useful to avoid earth connection by mistake. In IEC world, use of integral, mechanically interlocked earth switch is the standard feature for HV equipment. However, in IEEE world it is not the standard feature – only being provided based on the specific requirement.

VI. CONCLUSION

This paper outlines the codes and standard being used in IEC world for switchgear design and testing for arc resistant switchgear. In US worlds, codes and standard mainly covers different aspect for arc flash analysis.

The paper describes the process for arc flash hazard analysis, which includes incident energy calculation and selection of appropriate personal protective equipment (PPE).

The paper also covers different mitigation techniques to reduce the arc flash level.

REFERENCES

[1] IEEE guide for Arc-Flash Hazard Calculation, IEEE 1584-2002

[2] Standard for Electrical Safety Requirement for Employee Workplaces, NFPA 70E

[3] AC metal enclosed switchgear and control gear for rated voltages above 1 kV and up to and including 52 kV, IEC 62271-200

[4] Enclosed low voltage switchgear and control gear assemblies – Guide for testing under conditions of arcing due to internal fault, IEC/TR 61641

[5] Light sensing protective device by ABB – Arc protection System REA 101

[6] Remote Power Racking: Customer Focus publication by Eaton, Publication No. IA02204001E

Micro Grid Control and Protection

Sanjeev Bhatia
Member, IEEE and Member, CIGRE

ABSTRACT

With the increasing awareness of environment aspects, limited use of fossil fuels and need to feed power in remote areas, distributed generation is gaining popularity. Microgrid allows integration of Renewable Energy Generation such as Photovoltaic, Wind and Fuel Cell generations. Microgrid can be used for optimum use of generated energy, storage, and use of the same near load centers itself. Microgrid can operate in grid-connected or islanded mode and provides flexibility in managing power system. When microgrid operates in grid connected environment, this provides flexibility in drawing power from grid or supplying energy to grid in times of excess power availability besides better voltage and frequency control. In island mode of operation, microgrids can operate independently to provide electricity to the remote locations or to keep providing power in emergency situations like grid fault.

With the increasing penetration of distributed generation power sources, some technical challenges in network operation and system stability are imposed.

Since microgrids have relatively smaller capacity, they are vulnerable to random variation in generation and load which may cause operational stability. Due to relatively smaller capacity distribution generation sources, active and reactive power requirement to be monitored in island mode of operation and may require to be compensated, if required.

Conventional distribution systems are normally supplied through one source and has unidirectional power flow. However, in distributed generation systems there can be scenarios of bi-directional power flow and this creates complexity in protection system with respect to discrimination and selectivity.

This Paper will provide overview on challenges in microgrid operation in grid connected and island mode operation. Paper will cover required control and protection measures to take care of these challenges and for reliable operation of microgrid in grid connected as well as island mode of operation.

I. INTRODUCTION

Microgrid is referred to well defined area of an Electrical distribution network which constitutes of Distributed Energy Resources (DERs) besides localized loads. Distributed Energy Resources are relatively small-scale generation which may include Solar, Wind, and Fuel Cell generation besides energy storage devices that interface with low voltage or medium voltage distribution network. Microgrid is normally capable to be operated in grid-connected mode of operation or in island mode.

The concept of microgrid has emerged remarkably to integrate sustainable energy sources in the Electrical network besides various other considerable benefits as mentioned below:

- Potential to integrate various renewable resources into the Electrical Power System
- Localized power distribution
- Reduces grid investment due to lower network capacity requirement
- Ability to isolate itself from grid in island mode during utility grid disturbance
- During peak load, support gird by exporting power
- Environmental benefits due to very les or zero emission generation
- High energy efficiency due to combined heat and Power (CHP) technology
- Improved power quality
- Better reliability due to proximity between generation and consumption

Despite the advantages, microgrid has various challenges to distribution network with respect to control and protection. Distributed Energy Resources (DERs) are required to collectively control the network voltage and frequency, properly sharing the power demand, sustaining grid fault and disturbances, seamless transition from the grid connected mode of operation to the island mode of operation, and vice versa.

Technical challenges for microgrid operation are mainly due to requirement of sustained stable operation in grid connected mode of operation as well as in island mode. Challenge in grid connected mode of operation is affected by number and type of generating sources, and interconnection points of microgrid with the other power system.

Besides the control part, other major challenge is from protection point of view – protection system should be sensitive enough for both, utility grid faults as well as micro grid faults. Various protection concerns are required to be handled for integration of Distributed Energy Resources with distribution level network due to change in fault current level in grid connected and island mode of operation, reduction in reach of distance relays, and relay coordination. In island mode of operation, the major challenge is because of inverter based sources where the limiting factor is due to power electronics devices. Challenges pertaining to bidirectional power flow in microgrid system, low fault current levels due to more inverter-based sources, can be mitigated by adaptive protection mechanism with advanced communication system.

II. ARCHITECTURE

The main component of microgrid are Distributed Energy Resources (Wind Turbines, Solar PV plants, Fuel Cells, etc.), distributed energy storage devices like Flywheel, Batteries, etc. and Centralized Local Loads. Distributed Energy Resources can be mainly grouped in two types of categories – rotating machine-based generation and other is inverter-based generation sources. First category mainly comprises rotating machines which are directly interfaced to the network through transformers; however, second category utilizes Power Electronics converters (Photovoltaic system or Wind energy generation …) as interface media with the grid. From control point of view, methodologies are significantly different for inverter based interface system in comparison to conventional rotating machine generation. Further, from system stability and protection point of view, current rating of silicon devices being used in inverter-based systems are relatively less in comparison to conventional rotating machine-based system.

Distributed Energy storage devices are used in microgrid to provide the back-up to compensate for any power shortage, and mainly used in island mode of operation. Further due to larger time constant of rotating machines, response time against system swings is sluggish and this may cause in system instability during transient disturbances. Digital Energy storage device acts as a controllable AC voltage source and fast output characteristic of these devices help to response against any transient disturbance in the system.

Figure 1 represents single line diagram of typical microgrid that constitutes traditional rotating generating source, variable speed wind turbine, Fuel Cell, and battery energy storage unit.

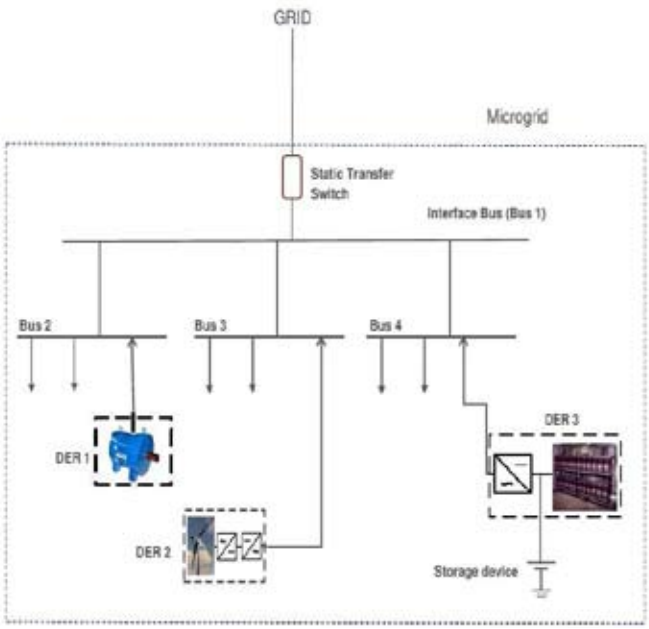

Fig. 1 : Single Line Diagram for Typical Microgrid

Distributed Energy Resources are through power-electronic converters, however rotating generator is directly coupled at bus. Microgrid is interfaced with the utility grid at Bus 1 through Static transfer switch.

Microgrid normally operates in grid connected mode - during this operation, Distributed Energy Resources (DERs) delivers constant real and reactive power to the distribution network, balance real and reactive power need is compensated by utility grid. In case of any fault in the utility grid, static transfer switch will disconnect microgrid from utility grid to enable microgrid to operate in island mode. Microgrid shall be able to resynchronize itself to the utility grid and seamlessly transition to the grid-connected mode of operation.

III. TECHNICAL CHALLENGES IN MICOGRID CONTROL AND PROTECTION

A. Technical Challenges in Microgrid Control

Most important challenge for microgrid control is that this should be capable to manage voltage, frequency, and system stability in both the operating scenarios – grid connected mode as well as island mode of operation.

In the grid connected operation, Distributed Energy Resources (DERs) operate in a constant real and reactive power control mode means that DERs exchange pre-specified power within distribution network with the objection to keep minimum import of power from utility grid.

In island mode of operation, control system must control local network voltage and frequency besides meeting immediate real or reactive power requirement of distribution network. Hence, appropriate voltage and frequency regulation schemes are required to maintain system stability.

Increase penetration of Distributed energy Resources in microgrid system may impose technical issues for stable operation of the microgrid due to steady state or transient voltage swing at interface bus, increase in short circuit levels and power quality problems.

Impedance between Distributed Energy Resources in microgrid is relatively lesser than the impedance in large Power system of utility grid – considering this the accuracy of voltage set points are important, as small error in set point may cause large circulating current within the DERs

B. Technical Challenges in Microgrid Protection

Microgrid concept have several concerns from system protection point of view, mainly because of adaptive protection settings and functions for both – grid connected as well as island mode of operation.

Some of the key challenges for microgrid protection system are:

- *Fault Current Level*

  When large number of small Distributed Energy Resources using rotating generators/motors are connected to network, this changes fault current level as rotating equipment contribute to system fault current.

  When inverter based Distributed Energy Resources are used, fault current is limited to relatively lower value. Due to lesser fault current than load current, even some of the protective relays may not operate.

  During grid connected mode or island mode of operation, the fault current seen by relay will be different – during grid connected mode of operation, fault will be fed by both (utility grid as well as Distributed Energy Resources). However, in island mode of operation fault current will only be from Distributed Energy Resources which would be quite less than the fault being fed in grid connected mode of operation.

- *Discrimination*

  In the power system network that has generating sources at the end of network, fault current decreases with increase in distance due to increase in impedance. In these types of systems, variation in fault current magnitude is used for discrimination.

  However, in island mode of operation, where microgrid will have mainly inverter interfaced generating sources, fault is limited to lower value and fault level will be constant irrespective of location. Due to this, traditional current based protection coordination which is normally done based on fault current value needs to be adapted for proper discrimination.

- *Sympathetic Tripping*

  Spurious tripping may occur when protective device operates for faults in an outside protective zone. Distributed Energy resource may feed the fault and relay may operate even for fault which is not within the protective zone. As shown in Figure 2, if fault is in line 2, since DER 1 will also be feeding the fault – relay on DER 1 or line 1 may spuriously operate which is not intended.

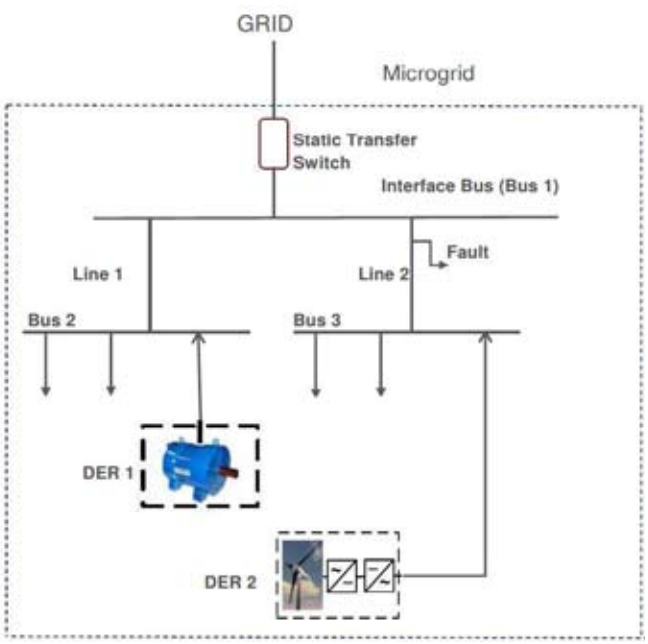

Fig. 2 : Sympathetic Tripping

- *Island Mode Protection*

  Inverter based Distributed Energy resources have limited fault current capability – therefore, fault currents are relatively lesser in the island mode of operation in comparison to grid connected mode of operation. Further, within the microgrid due to significant difference in power contribution by rotating sources and Inverter based sources, the fault current magnitude can vary within the islanded microgrid. Due to fault limiting this behavior, conventional over-current protection system may not work for island mode of microgrid operation.

- *Single Phase Connection*

  Some Distributed Energy Resources like small PV panels generate single phase power. These type

of DERs may create unbalance in the distribution network and can be the reason of stray earth currents in the system. This may impact overloading in the system besides risk to personnel safety.

- *Selectivity*

  Selectivity is the basic requirement of any protection system – system is selective, if the protective device closest to the fault operates to isolate the faulty system from the healthy system.

  Without Distribution Energy Resources, power flow in the system is only in one direction in both the scenarios, during normal operation as well as in the fault situation. By using conventional over-current protection scheme, proper protection coordination can easily be ensured to achieve the necessary sensitivity.

  However, when various Distributed Energy Resources are integrated in microgrid, conventional over-current and coordination may not work. There is possibility of disconnection of healthy feeder because this can feed the through fault. Further, bidirectional power flow which cause the conventional over current protection system to lose sensitivity.

  Renewable energy sources connected in microgrid may generate fluctuating power - setting for overcurrent relays are always based on maximum possible operating current. Due to randomness in generation levels, fault current may be lesser than in minimum operating mode in comparison to maximum operating mode and different fault level currents in both modes may cause relay losing the sensitivity.

  Considering the above-mentioned concerns on protection aspects for microgrid, in brief the main challenge arises from the fact that in microgrid where multiple Distributed Energy Resources are connected, power flow can be bi-directional in each feeder of the network. Other important area is the planning of suitable system which can adapt both the scenarios – grid connected mode of operation as well as island mode.

IV. MICOGRID CONTROL SYSTEM

As discussed earlier, microgrid can operate in two modes – grid connected mode and island mode. Proper Control techniques are important to have stable operation of microgrid in either of the operating modes.

Significant points which needs to be taken care in Microgrid control system are:

- Voltage and frequency regulation in both operating modes
- Proper load sharing between various Distributed Energy Resources (DERs) and within DERs and utility grid
- Power flow control between microgrid and Utility grid
- Microgrid islanding in case of unstable utility grid and resynchronization with utility grid
- System stability against transient disturbances and restoration the normal conditions while switching between modes

Microgrid control system can be mainly categorized into three levels:

1. *First Level of Control (Primary Control)* to maintain voltage and frequency stability of the microgrid subsequent to go into island mode from grid connected mode of operation.

   Besides maintaining voltage and frequency stability, control mechanism needs to ensure proper real and reactive power to loads. Power sharing control needs to avoid any circulating current within various Distributed Energy Resources and respective buses.
2. *Secondary Control* to compensate for any deviation in voltage and frequency due to primary control operation and restoration of stable voltage and frequency synchronization stage.
3. *Third Level of Control* is to manage power flow between microgrid and utility grid and to facilitate economically optimal operation

Control system for microgrid needs to be designed to ensure:

- Voltage and frequency stabilization post islanding – Subsequent the isolation of microgrid from utility grid, microgrid can lose voltage and frequency stability (during grid connected mode of operation, voltage and frequency is mainly being governed by utility grid)
- Considering various Distributed Energy Resources (DERs) are there in microgrid, main objective of primary control system is to ensure proper real and reactive power sharing within DERs
- To mitigate circulating current within various DERs and respective buses

Control system work based on reference and loop control mechanism, this particular control mechanism is implemented in active/reactive (PQ) mode or voltage control mode.

Distributed Energy Resources (DERs) operate in constant real and reactive power (PQ) control mode to share pre-specified power within the distribution network.

In island mode of operation, control mechanism need to control local network voltage and frequency and to take care the instantaneous real and reactive power. Hence, appropriate voltage and frequency regulation requirement are important in island mode of operation from system stability perspective.

A. Grid – Connected Mode Control

The grid connected mode of control is employed when the microgrid is connected to the utility grid and voltage and frequency is being dictated by utility grid voltage and frequency. In this particular case, the main control requirement is to regulate real and reactive powers that Distributed Energy Resources (DERs) share and feed to distribution network.

If the real and reactive power output of a DER is controlled independent of other DERs and loads, it is non-iterative grid connected mode of control. However, in case where real and reactive power of a particular DER is used as a reference and used as a command for controller, the control mechanism is iterative grid connected mode control.

This means that in non-iterative mechanism, the controller act for constant power delivery mode in grid connected mode of operation and as voltage/frequency controller act as dispatchable power delivery mode with real and reactive power support in grid connected mode of operation and in load sharing (Droop control) mode in island operation.

Inverter based Distributed Energy Resources are interfaced with the network through power-electronics converters.

Interface Converters provide additional conversion and control, along with fast dynamic response. Control mechanism of invert based DERs are different than the conventional rotating machines control.

In grid connected mode of operation, real and reactive power inverter based Distributed Energy Resources can either be controlled by voltage mode control or current mode control.

B. Island Mode Control

Islanding of microgrid can take place either due to some outage in the utility grid or even can be planned due to some maintenance requirements.

In island mode of operation, since utility grid is not there, significant requirement of control system is to ensure voltage and frequency regulation. Therefore, control mechanism needs to be built in such a way that the voltage and frequency can be maintained within pre-specified limits and microgrid is protected against real and reactive power oscillations.

If Distributed Energy Resources (DERs) supply the required real and reactive power besides regulating voltage and frequency of island microgrid, this is known as noninteractive island-mode control mechanism. On the other side, if microgrid have two or more DERs in the system which can share the load requirement, an interactive control mechanism is the recommended. By this, load sharing can be ensured along with voltage and frequency regulation.

V. MICOGRID PROTECTION

As explained above, due to the fact that multiple Distributed Energy Resources are connected on microgrid network, power flow can be bi-directional in each feeder of the network and for stable operation in grid connected mode of operation as well as island mode, conventional over current protection may not provide the proper protection coordination.

Microgrid protection system needs to be designed in such a way that:

- System is suitable for both grid connected as well as island mode of operation
- Adaptable for any type of Distributed Energy Resource and variable generation level
- Augmentable so that any new addition of Distributed energy Resource can eb taken care

Different solutions can be applied to take care the challenges as highlighted for microgrid operation either in grid connected mode or in island mode of operation.

A. Adaptive Protection System

Adaptive relays can be used to take care of the challenges the variation in fault current – in this adaptive protection system can be used - where settings, characteristics or logic functions can be adapted on-line by externally generated signals or control logics.

The adaptation of microgrid protection setting is required to adapt the settings based on actual state of the microgrid with respect to Distributed Energy Resource generation level and load requirement.

There can be various control logics which can be built to adapt the relay settings:

- Adjust the current-time characteristic based on the difference in voltage drop response that would be in short circuit or in over-load situation
- Use of directional over-current protection relay, for which settings can be parameterized based on various operating scenarios
- Setting adjustment based on comparing the system impedance to microgrid impedance

Adaptation in the protection settings can eb achieved by using IEDs with directional over-current protection function and with multiple setting groups.

Communication Infrastructure using standard protocol like IEC 61850 can be used to exchange information between IEDs and centralized setting coordination unit.

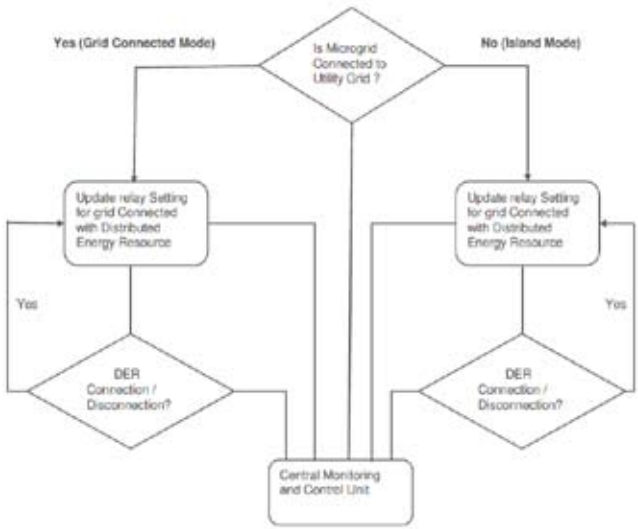

Fig. 3 : Microgrid Protection based on Different Relay Setting Groups

B. Protection of Inverter Interfaced Distributed Energy Resources

Since the fault current fed form inverter based DERs are quite less, conventional protection system may not provide the protection coverage for the faults.

Energy storage device like batteries in the system may be useful as these will feed the fault as well. Other possible solution can be to use a higher rated inverter which can provide sufficient fault current or use of pilot wire differential protection where communication can be from both ends of the line to sense the fault and initiate the tripping command, as required.

V. CONCLUSION

This paper outlines the different challenges in microgrid operation in parallel with utility grid and in island mode of operation. Challenges are highlighted for both. Microgrid–control and protection.

Challenged for control are mainly for the different control modes and requirement in grid connected mode of operation and in island mode of operation. Besides the control From protection point of view, the major challenges are due to bidirectional power flow, reduced fault level from inverter based Distributed Energy Resources, spurious tripping, protection blinding, discrimination and desires selectivity of the protection system.

The paper also elaborated the possible solutions like use of pilot wire differential protection, adaptive protection system, smart protection system using the standard communication protocol.

REFERENCES

[1] A. Oudalova and A. Fidigattibfd, “Adaptive Network Protection in MICROGRID”

[2] B. Su and Y. Li, “Trends of Smarter Protection for Smart Grid”

[3] N.D. Hatziagyriou and A.P. Sakis “Distributed Energy Sources; Technical Challenges”

[4] H. Laaksonem and K. Kauhaneimi, “Voltage and Frequecny Control of Low Voltage Microgrid with Converter based DG systems”

[5] Z. Wang, X. Huang and J. Jiang, “Design and Implementation of a Control system for Microgrid”

[6] T.S. Ustun, C. Ozansoy and A. Zayehs, “A Microgrid Protection System with Central Protection Unit”

[7] P. Anil Kumar, J. Shankar and Y. Nagaraju, “Protection issues in Microgrid”

[8] Md Razibul Islam and Hossam A. Gabbar, “Study of Microgrid Safety & Protection Strategies with Control System Infrastructures”

How to Erect Utility Poles Vertically

Shenbaga R. Kaniraj
Formerly Professor of Civil Engineering, IIT Delhi

1. PREAMBLE

Though the builders of the Tower of Pisa never intended it to lean, thanks to the faulty geotechnical practices of the 12-13 Century CE, the tower tilted by right degrees over time to secure a place in the list of Modern World Wonders alongside India's Taj Mahal – much admired for its superstructure made of delicate marble, which cannot tolerate an iota of differential settlement – firmly held in position by its invisible but innovative 17th Century CE foundation. Constructed mostly under water when river Yamuna was flowing close by and remaining unyielding in the face of future groundwater level fluctuations and increase in live load due to constant human movement, the foundation of Taj Mahal is as wondrous as the superstructure it supports. But, the far too much leaning, too petty humanmade utility poles, such as the ones shown in Figs. 1 to 3, a micro specimen of the vast multitude, go unnoticed all over in the 21st Century CE India. The natural palm trees, in comparison, grow much straighter (Fig 4). Untenable civil and geotechnical engineering practices followed in India are the causes of this malady. Causes, of which, qualified civil engineers from accredited institutions aren't supposed to be ignorant.

Figs, 1 to 3 : Inclined utility poles in Saravanampatti, Coimbatore, Tamil Nadu

Fig. 4 : Palm trees

2. Objectives

(a) To bring to the attention of the people concerned the problem of leaning utility poles in India

(b) To recommend a proper procedure for the construction of utility poles vertically and explain the reasons for the same

(c) To briefly explain thumb rule recommendations and theoretical calculations for the depth of embedment of utility poles

3. VISUAL APPRECIATION OF UTILITY POLE CONSTRUCTION

Two videos titled, *POLE LINE CONSTRUCTION - PART III - ERECTING POLES AND ATTACHING CROSSARMS - Department of Defense 1958*[1] and *New Utility Pole Install*[2] give a visual appreciation of how timber utility poles are installed in USA. The first video shows construction in remote areas using manual labour in 1950s and the second video shows the construction of much taller timber utility poles in a built-up area using advanced machines. Similarly, two videos titled *Electrical Pole Installation*[3] and *Pole Erection machine in India "telling tuber"*[4] show how concrete utility poles are generally installed in India. Table 1 shows the comparison between the practices in USA and India.

Table 1 : Practices of pole installation in USA and India

Feature	USA	India
Size of pit	A little larger than the pole width	Much larger than the pole width
Verticality check	By observation from perpendicular sides	No check for verticality
Support for pole	Provided from beginning to end	No support provided
Manpower	Skilled	Unskilled
Site supervision	Proper supervision at the site	No supervision
Backfill material	In-situ soil, granular soil	In-situ soil
Compaction of soil	Done carefully around the pole	No compaction
Safety precautions	Crew wearing proper safety gear	Crew not wearing any safety gear

4. RECOMMENDED PROCEDURE FOR INSTALLATION OF UTILITY POLES

There is a saying in Tamil: *Mudhal Konal Muttrum Konal*. It means literally, *oblique beginning oblique whole*. The saying implies, *things not begun well go astray completely*, the opposite of the saying: *A thing well begun is half done*. The Tamil saying is perfectly true for the installation of utility poles – *slanted first, more slanted later on*. Figure 5 shows the sketch of a utility pole *embedded directly in the ground*.

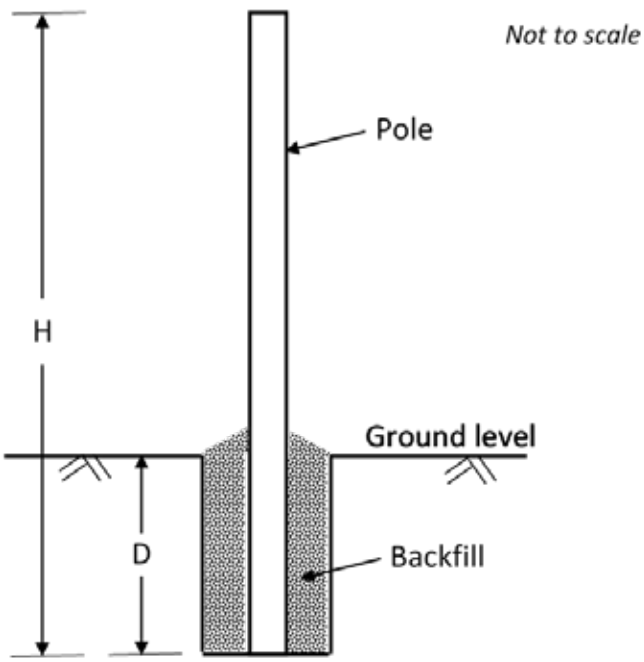

Fig. 5 : Utility pole directly embedded in earth

The proper way of installing such poles is described in the *10-Step Procedure* below.

Step 1. Ensure the ready availability of all necessary tools and equipment for the installation of the pole which include: (a) Safety gear for the crew, (b) Warning signages and traffic cones as required, (c) Tools to dig and remove the soil from the pit, (d) Granular backfill material if the excavated soil is unfit for use, (e) Tools to place and compact the backfill material around the pole inside the pit, (f) Devices or equipment to lift the pole and insert it into the pit, and (g) Temporary supports for the pole.

Step 2. Mark the location of the centre of the hole on the ground. Mark the plan dimensions of the hole if required.

Step 3. Excavate a vertical pit that is not appreciably larger than the dimensions of the buried part of the pole to the required depth. The objective here is not to disturb the *in-situ* soil beyond the minimum required distance. The soil in the crust at the surface is usually dry and hard; it shouldn't be disturbed to the extent possible. The excavation should be carried out using appropriate tools for the task. Ordinary spade is not an appropriate tool. A much larger area than required is usually excavated in the Indian practice, *mudhal konal*.

Step 4. The pit should be of sufficient depth. It should neither be shallow nor too deep. Guidelines for

depth of the pit are described in Sections 6 and 7. The crew at the site are provided with the depth of embedment of the pole. They should dig the pit to the prescribed depth. Any alteration in depth of embedment should be done only with the approval of the concerned authorities.

Step 5. Lift and insert the pole into the pit. It doesn't matter whether it is done using a machine or by people manually. Take adequate safety precautions while the pole is hoisted and inserted into the pit.

Step 6. Adjust the pole to a vertical position without it leaning in any direction. The easy way to do this is to stand away from the pole and observe its verticality from two perpendicular directions (Refer to the two videos of installation of poles in USA mentioned in Section 3).

Step 7. Use inclined props to support the pole to keep it in the vertical position until the pit is backfilled. Do not rely upon human labour to keep the pole standing vertically. A machine may be used or three props should be placed around the pole at 120° to each other in a manner that they are not disturbed during the backfilling operations.

Step 8. Backfill *properly*. For proper procedure refer to the two videos of installation of poles in USA mentioned in Section 3. Practicing the principles of compaction in geotechnical engineering is the key to the success of installing poles vertically. Backfilling is not just pushing the excavated soil back into the pit loosely. The soil bulks during excavation and it needs to be compacted to its original or higher unit weight during backfilling. But this is seldom done in the Indian construction practice. The videos of installation of poles in India mentioned in Section 3 show this reality. The importance of soil compaction is explained in Section 5. *The backfill should be compacted in layers; the thickness of each layer should not exceed 30 cm.* It is advisable to use stone blocks and gravel also as backfill material in addition to the excavated soil. Stone blocks should not be placed at the bottom of the pit; instead they should be placed near the surface. The stone blocks near the surface simulate the rigid pile cap action of short piles and provide additional lateral stability to the pole.

Step 9. Construct a compacted sloping mound of soil at the bottom the pole. It would facilitate flow of water away from the pole.

Step 10. Collect all the spoil and dispose it safely. Do not leave it scattered around the pole. Keep the work environment clean.

5. THE IMPORTANCE OF COMPACTION OF BACKFILL

Sandy soils are the most recommended backfill material. They can be handled easily (see the video *New Utility Pole Install* in Section 3), transported easily, and can be compacted to high densities at dry or submerged states and also at natural moisture content. The compaction of fine-grained soils such as silt and clay, on the other hand, depends on compaction effort and water content; they are not easy to handle and need to be compacted at or near *optimum moisture content* (OMC). OMC of soils can be determined by standard laboratory compaction tests.

5.1 Improvement in Density

Sand is a granular material that can exist in different states, from very loose to very dense states. The dry unit weight of a soil, γ_d, is defined by Eq. 1.

$$\gamma_d = W_s / V_s \quad ...(1)$$

In Eq. 1, W_s and V_s are the weight and volume of the dry soil, respectively. γ_d of soils can be determined in the laboratory by performing tests according to standard procedures. Sands in the loosest state have the minimum unit weight and sands in the densest state the maximum unit weight. Table 2 gives *indicative* values of minimum and maximum dry unit weights of sandy soils.

Soil type	γ_d, kN/m^3	
	Minimum	Maximum
Gravel	16.2	19.6
Coarse sand	14.9	19.3
Fine to coarse sand	13.1	21.3
Fine sand	14.1	18.5
Gravelly sand	15.2	21.7
Silty sand	13.1	18.5
Micaceous sand	11.7	18.5
Silty sand and gravel	14.1	22.9

5.2 Improvement in shear strength

Compaction improves the dry unit weight of soils which in turn increases their shear strength. Higher the shear strength of a soil, the more resistant it is to the load imposed on it. That is, it can bear more load and deforms less under the same load. The shear strength of soil, τ_f, is expressed by Eq. 2.

$$\tau_f = c + \sigma \tan \varphi \quad ...(2)$$

In Eq. 2, c = cohesion intercept, and φ = angle of shearing resistance, which are called the shear strength parameters of soils. As c and φ increase, the shear strength of the soil increases.

5.3 Reduction in lateral deformation

The deformation of a soil when subjected to pressure is governed by its stress-strain modulus, *E*. Higher the value of *E*, proportionately lesser would be the deformation of the soil under the same pressure.

5.4 Improvement in passive earth pressure

If a pole moves laterally inside the pit, it would apply pressure against the soil. The resistance to this is the *lateral passive* pressure from the soil. It is called *passive* because the moving pole is active and the static soil is passive. The passive earth pressure, σ_h', is given by Eq. 3.

$$\sigma_h' = K_p \sigma_v' \quad ...(3)$$

In Eq. 3, σ_v' = vertical effective stress, and K_p = coefficient of earth pressure. The value of K_p for sands depends on φ; K_p increases as φ increases which in turn increases the passive resistance provided by the sand. Equation 4 gives Rankine's equation for K_p for sands.

$$K_p = \frac{1 + \text{Sin}\ \varphi}{1 + \text{Sin}\ \varphi} \quad ...(4)$$

Indicative values of φ, *E*, and K_p for sands of different compactness are shown in Table 3. The beneficial effects of compaction – the magnitudes of increase in shear strength (tan φ), stress-strain modulus (*E*), and passive earth pressure (K_p) – are evident from the tabular values.

Table 3 : φ, *E*, and K_p for sands of different compactness

Soil compactness	φ, degrees	tan φ	*E*, MPa	K_p
Very loose	< 28	0.53	-	< 2.77
Loose	28-30	0.53-0.58	9.81-24.51	2.77-3
Medium dense	30-36	0.58-0.73	-	3.00-3.85
Dense	36-41	0.73-0.87	49.03-83.36	3.85-4.81
Very dense	> 41	> 0.87	-	> 4.81

6. THUMB RULES FOR DEPTH OF EMBEDMENT OF UTILITY POLES

The depth of embedment, *D*, of utility poles is determined by theoretical calculations using appropriate design procedures in the design office. The loads and moments transmitted by the utility pole and the soil parameters are taken into account in the design. This is explained in Sections 7 and 8. The thumb rule recommendations provided in this section are useful for preliminary purposes such as planning and cost estimation.

Different thumb rules have been recommended for *D*. The value of *D* is generally correlated to the *total* length or height, *H*, of the pole. The Central Public Works Department[5] (CPWD) of India has specified the thumb rule given in Eq. 5.

$$D = H/6 \quad ...(5)$$

A common recommendation made by various agencies is given in Eq. 6. This is referred to as *Common* herein.

$$D = 0.1H + 0.61m \quad ...(6)$$

In Eq. 6, *D* and *H* are in metres.

Other recommendations are by *Electrical 4 U*[6], referred to as *E4U*, and Seattle *City Light Construction Standard*[7], referred to as *Seattle*. *E4U* recommendation also specifies the maximum lateral load on the pole. Table 4 gives the values of *D* according to the CPWD, C*ommon*, *E4U*, and *Seattle* recommendations. There is considerable variation in the different recommendations because the recommendations are empirical, based on local experience.

No engineering design can be based solely on thumb rules or a set of tabular values. Several factors that influence the depth of embedment need to be considered while designing and drafting specifications for foundations for utility poles.

Table 4 : Values of D according to different recommendations

H, m	*D*, m			
	E4U	CPWD (Eq. 6)	*Common* (Eq. 7)	*Seattle*
21.0	-	3.50	2.71	2.7 – 3.0
19.5	-	3.25	2.56	2.55 2.85
18.0	-	3.00	2.41	2.4 – 2.7
17.0	2.4	2.83	2.31	-
16.5	2.4	2.75	2.26	2.25 – 2.55
16.0	2.3	2.67	2.21	-
15.0	-	2.50	2.11	2.1 – 2.4
14.5	2.3	2.42	2.06	-
13.5	-	2.25	1.96	2.1
12.0	2.0	2.00	1.81	2.1
11.5	2.0	1.92	1.76	-
11.0	1.8	1.83	1.71	-
9.5	1.8	1.58	1.56	-
9.0	1.5	1.50	1.51	-
8.0	1.5	1.33	1.41	-
7.5	1.2	1.25	1.36	-
6.0	1.2	1.00	1.21	-

7. FACTORS TO BE CONSIDERED IN THE DEPTH OF EMBEDMENT OF FOUNDATIONS FOR UTILITY POLES

The factors to be considered in the design of pole foundations are:

(a) Forces and moments acting on the pole,

(b) Foundation type,

(c) Soil characteristics,

(d) Method of construction, and

(e) Permissible deformation and lean.

As these factors are not constant for all poles at all places, one single design would not be thus satisfactory for all poles. A proper geotechnical analysis is required considering all the factors.

7.1 Forces and moments acting on the pole

The forces acting on a pole are the vertical force due to self-weight and live loads, if any, and lateral forces. The lateral forces include wind loads and other lateral loads acting on the pole. For example, a light pole with below ground wiring is subjected to a different lateral load than a transmission line pole supporting cables. Among transmission line poles, the lateral loads and moments acting on a pole would depend on its position – middle pole, corner pole, or end pole. Corner and end poles may require additional support like cable stays and inclined poles. The user agencies often specify the method of calculation of forces on the utility poles, e.g. United States Department of Agriculture[8], National Wood Pole Standards[9], and ANSI Pole Standards[10].

7.2 Foundation type

The foundation for poles can be of two types: (a) A prism of compacted in-situ soil around the pole below the ground level, and (b) A block of freshly laid cement concrete around the pole below the ground level. The former type is referred to as directly embedded into the earth pole. The videos of pole installation referred to in Section 3 and the recommended procedure of installation in Section 4 are for this type of poles directly embedded into the earth. The required plan dimensions of the foundation and depth of embedment will depend on the foundation type.

7.3 Soil characteristics

Soil is a natural geological material and unlike other civil engineering materials like steel and concrete the soil characteristics are not constant or limited to a narrow range of values. They differ from one place to another, in type from fine grained soils to coarse grained soils, in consistency from very soft to very hard, and in their index and engineering properties. It is the soil around and below the embedded pole foundation which provides resistance to the loads and moments acting on the pole and therefore determines its stability and deformation.

7.4 Method of construction

In the construction of both cement concrete block and compacted soil prism types of foundations, a pit of proper dimensions is first excavated. In the former type of foundation if concrete is laid directly into the pit, the concrete block is in contact with the undisturbed soil. It is the dimensions of the concrete block and the properties of the undisturbed soil that will govern the stability and deformation of the pole. But, in the latter type of foundation it is the dimensions of the pole and if too large a size pit is excavated the characteristics of the compacted soil, otherwise the properties of the undisturbed soil, that will govern the stability and deformation of the pole.

7.5 Permissible deformation and lean

It is due to the improper design and construction of foundation and the consequent inadequate lateral support provided by the soil that a pole deforms laterally causing it to lean. The lean should not be visible. The vertical deformation or settlement of a pole is not usually significant.

8. THEORETICAL DETERMINATION OF THE DEPTH OF EMBEDMENT OF POLE FOUNDATION

Calculations for the depth of embedment should be carried out by engineers possessing a good knowledge of geotechnical engineering. The approach to design will depend on how the foundation would respond to the imposed superstructural loads and moments and transmit them to the surrounding soil. The cement concrete block foundation will behave like a rigid block and tend to *translate* laterally; the dimensions length, width, and depth of the concrete block should be used in the calculations. In the case of poles directly embedded into earth, the pole length inside the ground will tend to *rotate* about a point below the ground surface; the width and depth of the pole should be used in the calculations. Geotechnical engineering textbooks should be consulted. Methods suggested by Broms[11,12] and Fleming et al[13] are commonly used. Gajan and McNames[14] have discussed the design procedures of determination of embedment depths for directly embedded utility poles and also suggested an improved design procedure. They concluded that the thumb rule *Common* (Eq. 6) underestimated or overestimated the values of D to the extent of ±60 percent.

9. OTHER RECOMMENDATIONS

(a) For rectangular cross-section poles, ideally the pit also should be rectangular in plan. A rectangular pit can be excavated by placing a rectangular steel

casing as guide at the ground level and digging through it. Alternatively, an auger can be used to drill a circular pit to the required depth first. Then a rectangular casing can be placed covering the circular hole. The circular pit can be enlarged to the size of the casing. Required rectangular steel casings and appropriate tools for digging and removal of soil from the bottom of the pit should be developed.

(b) The construction procedures and safety precautions should be implemented at the site properly. Each pole should be labelled for identification purpose. Making and submitting a video of the installation of each pole should be made mandatory. The video should show among other things the presence of a supervisor at the site monitoring the field operations.

(c) Use of concrete as backfill is seldom necessary. It increases the cost and is required only if the compacted soil cannot provide stability. Experimental research on prototype poles can be carried out with and without concrete in the backfill. Moreover, the use of concrete brings to the fore yet another unprofessional civil engineering practice in India. Concrete, generally of poor quality, is often prepared indiscriminately on roads manually. This poor civic sense damages the already fragile infrastructure of the country. This primitive practice should be curbed by the authorities.

10. CONCLUDING STATEMENT

Erecting the utility poles vertically is easy; Indian civil engineers should be able to do that.

Acknowledgement

I thank the Central Board of Irrigation and Power for the opportunity provided to me to publish a preliminary note that I circulated earlier to raise the awareness of the problem of Leaning Utility Poles in India in an improved form as an article in the AARO Journal. This gesture by CBIP might help to raise the practice of installation of utility poles in India to professional level.

REFERENCE

1. Pole Line Construction - Part III - Erecting Poles and Attaching Crossarms - Department of Defense 1958, https://www.youtube.com/watch?v=hOtkQArD9MY, Accessed on 11 August 2020.
2. New Utility Pole Install, https://www.youtube.com/watch?v=WfNuXyNmB2w&t=3s, https://www.youtube.com/watch?v=WfNuXyNmB2w, Accessed on 11 August 2020.
3. Electrical Pole Installation, https://www.youtube.com/watch?v=mOvD4yjWsV8, Accessed on 11 August 2020.
4. Electrical Pole Installation and Pole Erection machine in India “telling tuber”, https://www.youtube.com/watch?v=LQCeft1IO4M, Accessed 11 August 2020.
5. The General Specifications for Electrical Works (Part II – External), 1994, p 45.
6. Electric poles, https://www.electrical4u.com/electric-poles/, Accessed on 13 August 2020.
7. Wood pole installation, Seattle City Light Construction Standard, 0100.07, http://www.seattle.gov/light/engstd/docs2/0100.07.pdf, Accessed on 14 August 2020.
8. Unguyed Distribution Poles—Strength Requirements, https://www.rd.usda.gov/files/UEP_Bulletin_1724E-150.pdf, Accessed on 14 August 2020.
9. National Wood Pole Standards, https://woodpoles.org/portals/2/documents/WoodPoleCode_Overview.pdf, Accessed on 14 August 2020.
10. ANSI Pole Standards: Development and Maintenance, https://www.fpl.fs.fed.us/documnts/pdf1994/wolfe94b.pdf, Accessed on 14 August 2020.
11. Broms, B. 1964a. Lateral resistance of piles in cohesive soils, Journal of Soil Mechanics and Foundation Division, ASCE, Vol. 90, SM2, pp. 27–63.
12. Broms, B. 1964b. Lateral resistance of piles in cohesionless soils, Journal of Soil Mechanics and Foundation Division, ASCE, Vol. 90, SM3, pp. 123–156.
13. Fleming, W. G. K., Weltman, A. J., Randolph, M. F., and Elson, W. K. 1992. Piling engineering, 2nd Ed., Blackie & Son, New York.
14. Gajan, S. and McNames, C. Improved design of embedment depths for transmission pole foundations subject to lateral loading, Practice Periodical on Structural Design and Construction, Vol. 15, No. 1, February 1, 2010, pp 73-81. file:///C:/Users/rsamy/Downloads/Struc_Des_Con_Trans_Poles%20(1).pdf, Accessed on 14 August 2020.

Managing & Preventing Disasters in Transmission Lines

Anil Deoraj
Taurus Powertronics Pvt. Ltd.

GROWTH OF POWER TRANSMISSION IN INDIA

India is seventh largest country in the world with total area of 32.87 Lakh Sq Km. Year on year the transmission line network is growing rapidly and as on today we have more than 4.2 Lakh Circuit km lines. This is only for the 220, 400, 765 kV AC lines and 500 & 800 kV HVDC lines. So far 597121 villages are electrically connected and the number is growing every day.

Natural Disaster Situations

India offers variety in geography such as it has Snow Mountains, Hills, Desserts, Coastal Areas, Plateaus and Rivers etc. Floods, Landslide, cyclones are the common natural disasters we face every year. Our transmission network is always exposed to these disasters and very often the system fails to withstand these disasters.

Network Related Disaster Situations

Complex geography of our country

Land congestion

Unplanned growth of the network

Ageing of Lines & Components

Erratic Incidents

DISASTERS IN TRANSMISSION LINES

Structural Failures

A Transmission Line Tower collapses or the Conductor snaps during Heavy wind, Floods, Landslide, and Tsunami etc. which are due to Natural disasters. Also the same can happen due to manmade disasters such as fire, theft, terrorist attack, excess water & fertilizers in the field, chemical outflow of gasses and liquid from nearby factories etc.

Electrical Failures

Mainly the Electrical Failure are due to failure of different equipment at substation or Generating stations. Also this can be on the Transmission Line due to Corona on insulators, High Tower Footing Impedance & Resistance, Low clearance, Weak / damaged Insulators etc. Generally Electrical failures are restored quickly by alternate arrangements but restoring Structural Failures takes days or weeks sometimes.

Situations we address in the Power Network pertaining to disasters

(i) Disaster Management

(ii) Disaster Prevention

DISASTER MANAGEMENT IN TRANSMISSION LINES

Most of the natural disasters are unavoidable and many times the nearby transmission network gets affected during this. Now the objective is to restore the network as quickly as possible.

Towers are damaged, conductors are snapped, and even the mobile network is down. The location of the damage is not known and also there is no immediate manpower available for the line patrolling. In such cases the Offline Fault Locator is extensively used from a substation to locate the fault accurately.

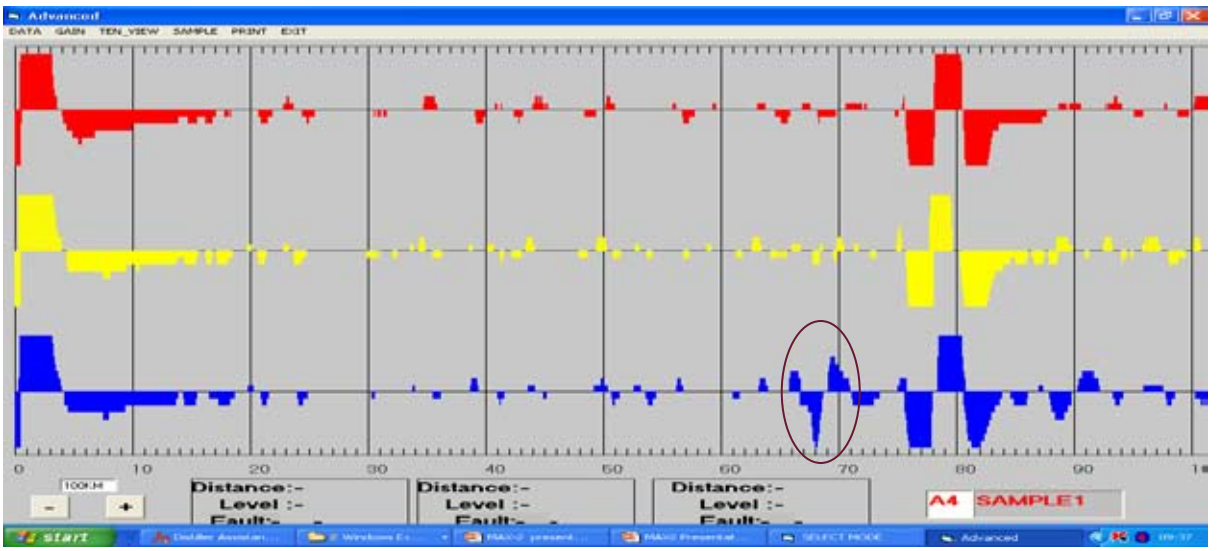

Locate the Faults across the Line

Ascertain the Faults across the Line

Assess the quantum of damage/Loss

Remedial action to rectify the Fault

Use Off Line Fault Locator to locate the faults accurately

Identify the Faulty Tower/Conductor

Ascertain type, distance & Criticality of the Faults

Remedial solutions (ERS) deployed based on urgency

PREVENTING DISASTER SITUATIONS IN TRANSMISSION LINES

Addressing the disasters before they happen.

The disaster (Collapsing of Towers & Snapping of conductors) can be prevented or reduced if proper data of the Health of the Line Network by carrying out different tests are collected and acted upon at periodic intervals. The data need be systematically analysed and the trending be assessed. Based on these findings the preventive measures can be taken up.

Before initiating any preventive action it is necessary to identify the vulnerable points in the network under Electrical and Structural category. This Early Detection System is also known as "Transmission Network Health Audit".

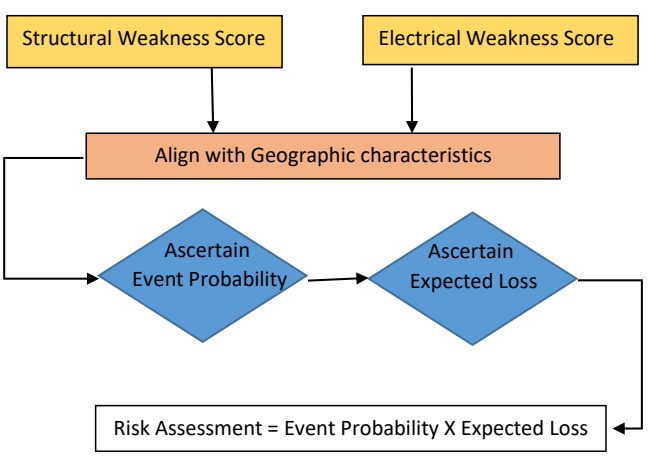

1. ASSESSMENT OF THE STRUCTURAL AND ELECTRICAL SCORES

Electrical Parameters	Structural Parameters
Damaged Insulators	Damaged Chimney, Soil/Weed on Chimney
Polluted Insulators	Rusting of Tower Legs
Missing or Disconnected Earth Bond	Improper Tack Welding
Low ground clearance with respect to	Missing Tower body Nut bolts

Buildings Trees,	Missing Tower Members
Rail / Road crossing	Bad Armouring of Suspension Clamp,
other lines crossings	Missing/Broken Spacers,
Corona on the Insulator	Damaged /Tilted Corona Ring
High Tower Footing Impedance & Resistance	Difference in tower legs distance
Hotspots at Jumper and Mid- span joints etc.	Difference in leg height level

2. PROCESS FOR ASCERTAINING STRUCTURAL & ELECTRICAL SCORES

(i) Line Signature Analysis

Capturing Transmission Line Signature helps us to identify abnormal (inhomogeneity) points in the line for further investigation. Using this technique we can find out exact location of (a) Damaged Conductor (b) Loose joints, (c) Leaky insulators, (d) errors in support structure, (e) Line sag, (f) Encroachment and (g) Tree growth etc. without leaving the substation.

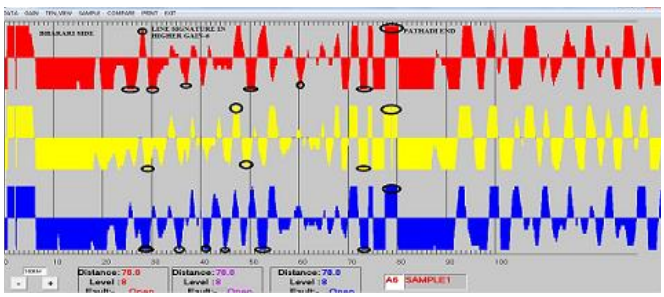

(ii) Tower Health Analysis

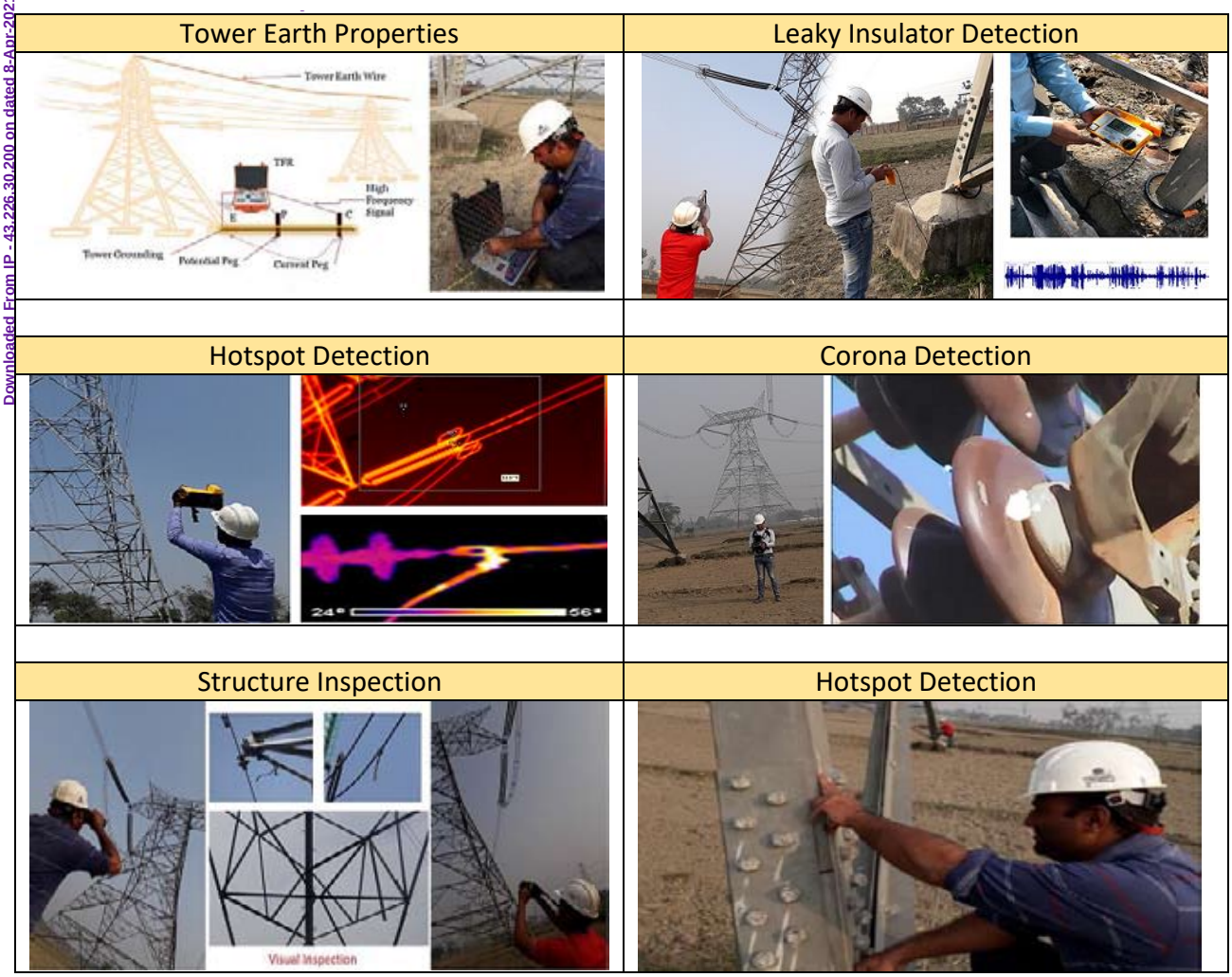

iii. Clearance Check

Periodic check and measurement of clearance is very important for EHV lines. Growing trees, Buildings near or under the line, Bridges, Railway lines, other transmission line crossings etc. are the main reasons for frequent tripping which make the line further weak and it may not withstand the pressure of natural disasters.

3. DATA ANALYSIS

Step 1

The data captured from different equipment are assigned to the tower it belongs to in a single row of the database. There may be one or more columns for each test data. For example Leakage Current is measured on all four legs of the tower. Hence there are 4 columns for each readings.

	A	B	C	D	E	F	G	H	I	X	Y	Z	AA	AB	AC	AD	AE	AF	AG	AH
1	SL No	Tower No	Tower Type	Za (Ω)	Rc (Ω)	L (μh)	Za (Ω)	Rc (Ω)	L (μh)	US Score	IR	IR Score	Corona	Corona Score	Tree Clearance	Score Tree clearan	Jumper Nut bolts	score of jumper nut bolt	Damaged/missing insulator	score o Damage & Missir
2	1	15	T	4.5	0	35.3	5.4	0	42	-	28.7	0	21500	4	-	-	-	-	Damaged(Ckt-2 R Phase JMD Side)	1
3	2	16	T	3.5	0	24.5	3.5	0	22	3	29.3	0	30000	4	Low	2	-	-	Damaged(ckt-1 R Phase & ckt-2 Yphase Andal side, Ckt-1 Y phase& ckt-2 Y Phase	4
4	3	17	T	4.3	0.6	33.7	3	0.2	24	-	32.0	0	3000	2	Low	2	-	-	ok	0
5	4	18	T	3.6	0	28.2	3.8	0.2	30	-	30.0	0	7000	3	Low	2	-	-	Missing Disk (Ckt-2, R Phase, Jam Side)	1
6	5	19	T	4.6	1	35.1	3.9	0	31	-	28.4	0	1800	1	-	-	-	-	ok	0
7	6	20	T	5.1	0	40.4	4.3	1	33	-	33.0	0	1800	1	Low	2	-	-	Missing Disk (Ckt-2, R Phase, Jam Side)	1
8	7	21	T	6	2	39.1	6	1	47	-	35.5	0	0	-	Medium	1	-	-	Damaged(Ckt-1 & Ckt-2 B Phase Jam Side)	2
9	8	22	T	3.6	0	27.9	3.9	1	29	-	34.3	0	0	-	Medium	1	-	-	Damaged(Ckt-1 R Phase And Side)	1
10	9	23	T	3.2	0	25	3.2	0	25	-	31.3	0	0	-	Medium	1	-	-	Damaged(Ckt-1 Y Phase Jam Side)	1
11	10	24	S	3.6	0	28.1	3.8	0	30	-	-	0	0	-	Medium	1	-	-	ok	0
12	11	25	S	3.2	0	24.4	2.9	0	22	-	-	0	0	-	-	-	-	-	Broken(Ckt-1 R Phase)	1
13	12	26	T	3.7	0	28.9	4.6	0	36	-	40.0	0	4000	2	-	-	-	-	ok	0
14	13	27	S	3.1	0	23.7	3.1	0	24	-	-	0	0	-	Medium	1	-	-	Missing Disk (Ckt-2, R Phase, Jam Side)	1
15	14	28	S	3.1	0	23.7	3.2	0	22	-	-	0	2100	1	Medium	1	-	-	Tilted(Top Phase)	0
16	15	29	S	5.1	1	36.2	5.2	1	37	-	-	0	3200	2	Low	2	-	-	ok	0
17	16	30	T	6.5	2	45.2	6.8	2	49	-	40.2	0	4500	2	Low	2	-	-	ok	0
18	17	31	S	6.7	0	52.7	6.7	0	53	-	-	0	0	-	Low	2	-	-	ok	0
19	18	32	T	16	1	126.1	16.7	0	123	2	45.9	1	8600	3	-	-	M-8	2	ok	0
20	19	33	T	6.8	0	53.3	6.7	0	52	-	37.9	0	4200	2	Very Low	3	-	-	Damaged -1(Ckt-1, Y Phase, Jam side)	1
21	20	34	T	-	-	-	-	-	-	-	33.9	0	2000	1	-	-	-	-	ok	0
22	21	35	T	42	11	316.5	-	-	-	-	25.4	0	0	-	-	-	-	-	ok	0
23	22	36	T	41	6	319.6	39	10	294	-	29.7	0	2700	1	-	-	-	-	ok	0
24	23	37	T	4	0	31.7	91	66	374	-	30.4	0	5000	3	-	-	-	-	ok	0

Step 2

For each test a scoring pattern is developed. Higher the score, the weakness or severity is more.

The below flow chart illustrate the score for Tower Footing Impedance and Resistance Test.

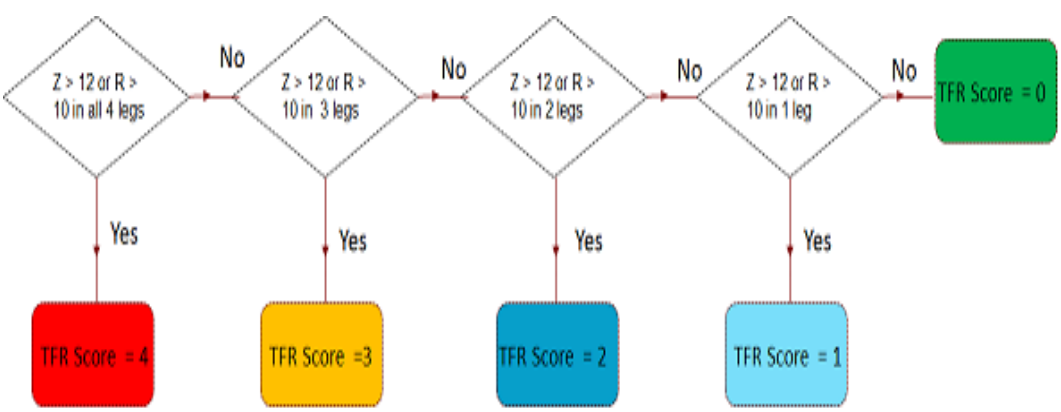

Same way the scoring method is developed for each test carried out on a tower.

Step 3

Assessing the criticalities by providing weightage to each parameter

	Sl. No	Tower No	Type	tfr lvl	Tot TFR	LCM lvl	US Lvl	IR Lvl	Corona Lvl	Impr Nut	Brokn Disk	Clearance	LSA	Electrical Score	ABC - Elec	Missing Memb	Body Nut Bolt	Fondation	Rusted Legs	Leg Dist	Hight Lvl	Spacer
46	309	1866	S		4		1							5	D					5	10	
47	99	1656	T	3	11				1	5			3	20	A						15	
48	178	1735	T		4			1						5	D						5	
49	325	1882	T		4			1						5	D					5	10	
50	430	1987	T	3	11				1	5				17	B	15						
51	256	1813	S		4									4	D						15	
52	350	1907	S		4									4	D						15	
53	229	1786	T		4								3	7	D	2		1			10	1
54	308	1865	S		4				3			5	3	15	B	3		1			10	
55	67	1624	T		4									4	D	13		1				
56	4	1561	S	3	11									11	C	2			1		10	1
57	163	1720	T	1	5		3		1				3	12	C	3					10	
58	1	1558	T	3	11					6	5			22	A	13						
59	63	1620	S		6								3	9	D	1		1	1		10	
60	12	1569	S		4									4	D	2		1		5	5	
61	77	1634	S	2	10								3	13	C	2		1			10	

Step 4

Categorisation of critical network elements

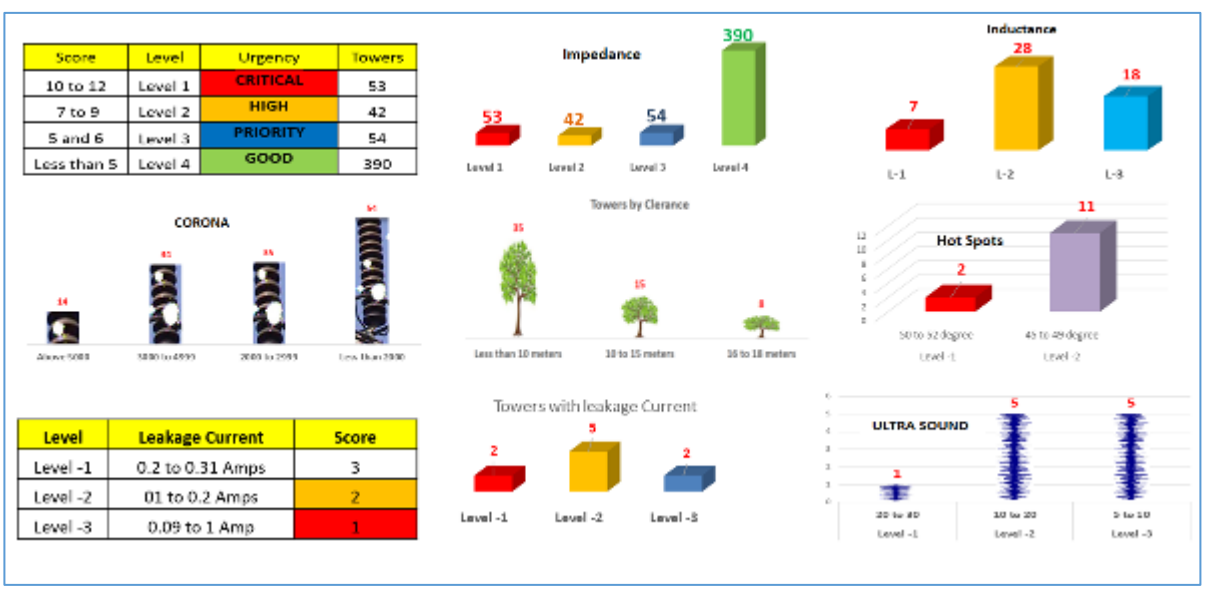

Step 5

Total score is assigned for the Electrical and Structural category and number of towers calculated for different severity level.

In the below example there are 16 towers which are electrically very weak and 23 towers are structurally. This helps in planning and prioritising the maintenance work.

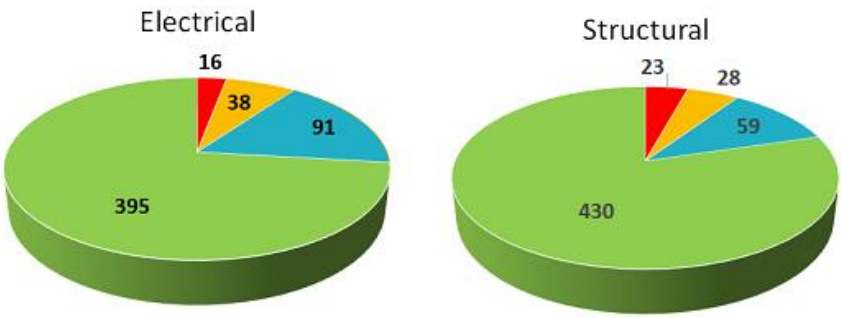

GEOGRAPHIC IMPACT ON THE NETWORK

Once the level of vulnerability under Electrical & Structural category are ascertained, the network is plotted on the google map. Further categorisation is done for the most vulnerable network elements based on the geographic impact on the vulnerable places identified. For example, Tower Number 20 and 25 in below image are having the same score for structural category, but the Tower No 20 will be categorised more critical as it is very close to the river bed.

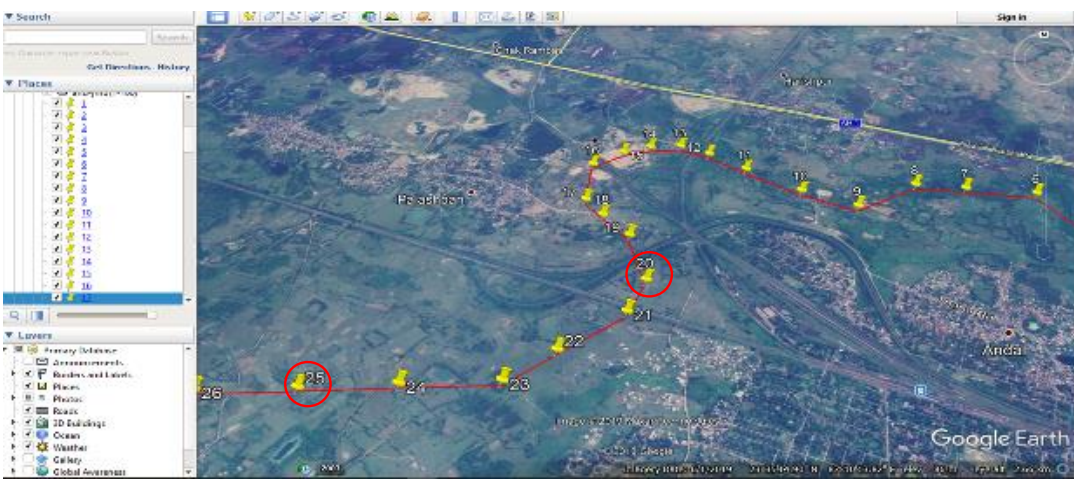

Single data sheet for one tower.

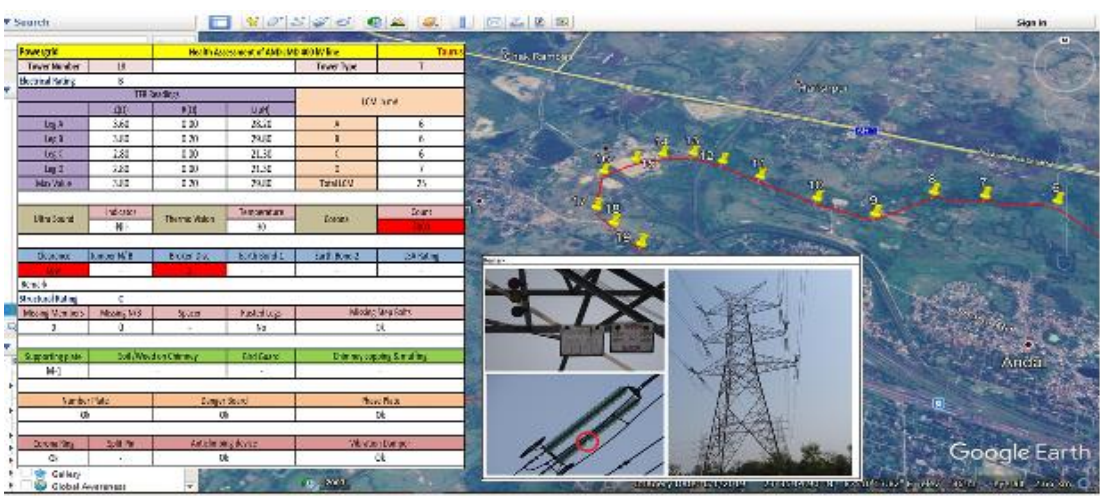

CONCLUSION

The impact of any disaster on the Power Transmission network can be reduced with preventive action based on systematic study and the analysis of the data carried out in the network. This practise will help the Power Utilities to be proactive in assessing the network health so as to minimise the losses and the risk to a great extent.